Test Report: XDR-480-48

480W AC/DC High-End Ultra Slim Industrial DIN Rail Power

■ DESIGN VERIFY TEST

Output Function Test
Input Function Test
Protection Function Test
Control Function Test
Component Stress Test

■ SAFETY & E.M.C. TEST

Safety Test
E.M.C. Test

■ RELIABILITY TEST

ENVIRONMENT TEST

■ DESIGN VERIFY TEST

OUTPUT FUNCTION TEST

NO	TEST ITEM	SPECIFICATION	TEST CONDITION	RESULT
1	OUTPUT VOLTAGE ADJUST RANGE	CH1: 48V~55V	I/P : 277 VAC I/P : 230 VAC I/P : 115 VAC O/P : MIN LOAD Ta : 25℃	46.484V~57.46V/277VAC 46.485V~57.46V/230VAC 46.486V~57.46V/115VAC
2	OUTPUT VOLTAGE TOLERANCE	V1: -1% ~ +1%	I/P: 85VAC~305VAC O/P:FULL~MIN. LOAD Ta:25℃	V1: -0.025% ~ 0.025%
3	LINE REGULATION	V1: -0.5% ~ +0.5%	I/P: 85VAC~ 305VAC O/P:FULL LOAD Ta:25℃	V1: -0.025% ~ 0.025%
4	LOAD REGULATION	V1: -1% ~ +1%	I/P: 230VAC O/P:FULL ~MIN LOAD Ta:25℃	V1: -0.007% ~ 0%
5	OVER/UNDERSHOOT TEST	<±5%	I/P: 230VAC O/P:FULL LOAD / NO LOAD/ PEAK LOAD Ta:25℃	0.4%
6	RIPPLE & NOISE (Max)	V1: 120mVp-p	I/P:230VAC O/P:FULL LOAD Ta:25℃	42mVp-p / high frequency 51mVp-p / low frequency
	high frequency : 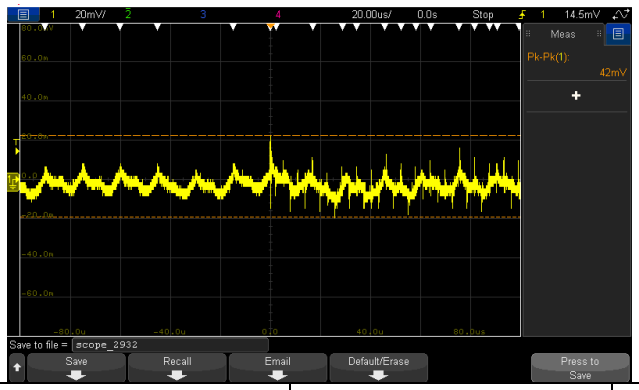		low frequency : 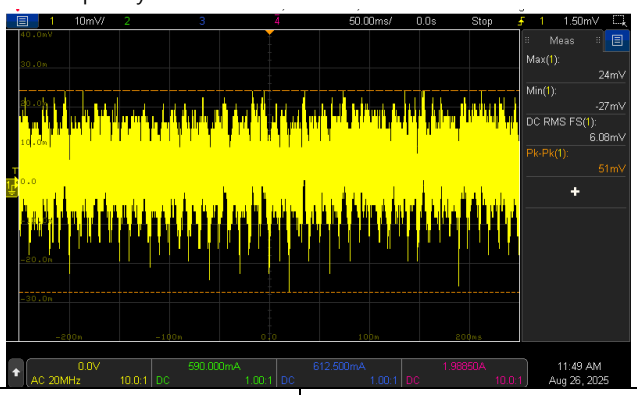	
7	SET UP TIME(Max)	277VAC/1500ms 230VAC/1500ms 115VAC/1500ms	I/P : 230 VAC I/P : 115 VAC O/P : FULL LOAD Ta : 25℃	277VAC/ 373 ms 230VAC/ 432.9ms 115VAC/ 774.4ms
	INPUT=277VAC/50HZ @ FULL LOAD CH1: Output Voltage CH3: AC Input Voltage		INPUT=115VAC/60HZ @ FULL LOAD CH1: Output Voltage CH3: AC Input Voltage	

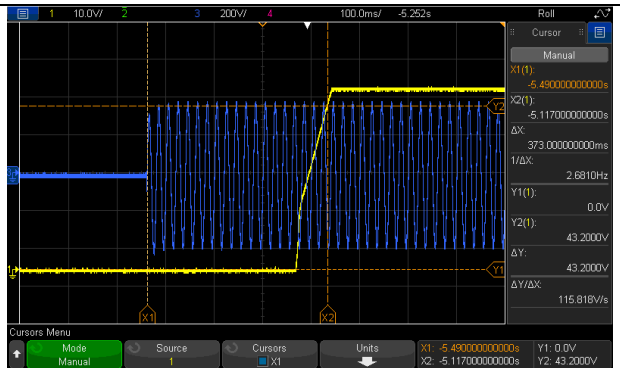

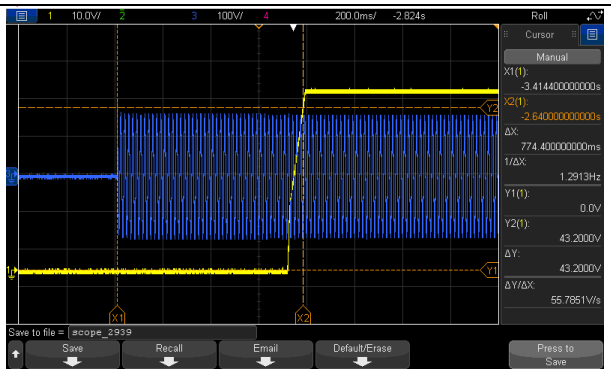

INPUT=230VAC/50HZ @ FULL LOAD

CH1: Output Voltage CH3: AC Input Voltage

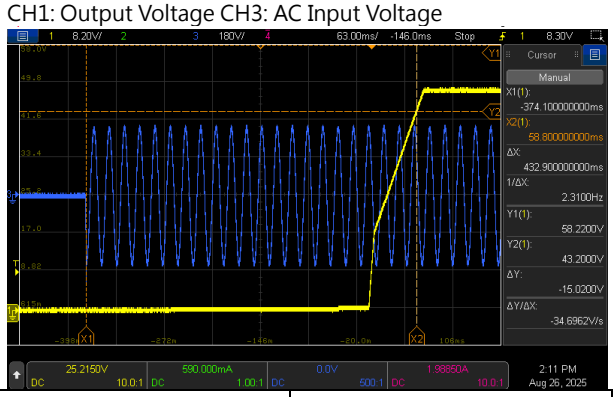

8	RISE TIME (Max)	277VAC/150ms 230VAC/150ms 115VAC/150ms	I/P： 230 VAC I/P： 115 VAC O/P：FULL LOAD Ta：25℃	277VAC/ 59.5ms 230VAC/ 60.2ms 115VAC/ 60.4ms

INPUT=277VAC/50HZ @ FULL LOAD

CH1: Output Voltage

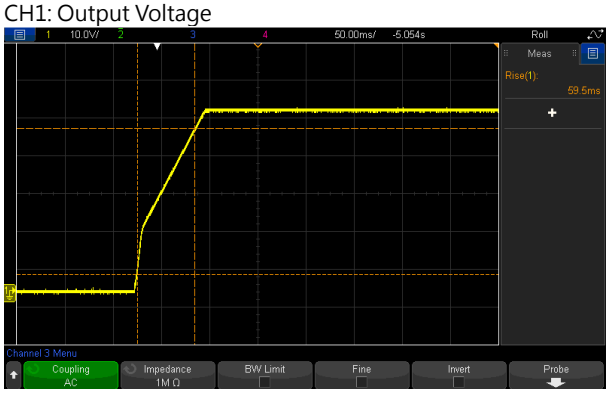

INPUT=115VAC/60HZ @ FULL LOAD

CH1: Output Voltage

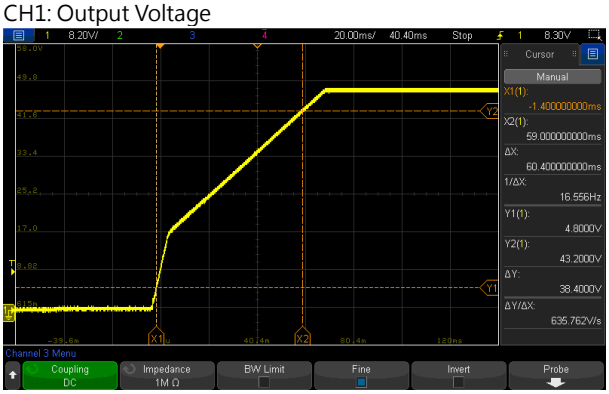

INPUT=230VAC/50HZ @ FULL LOAD

CH1: Output Voltage

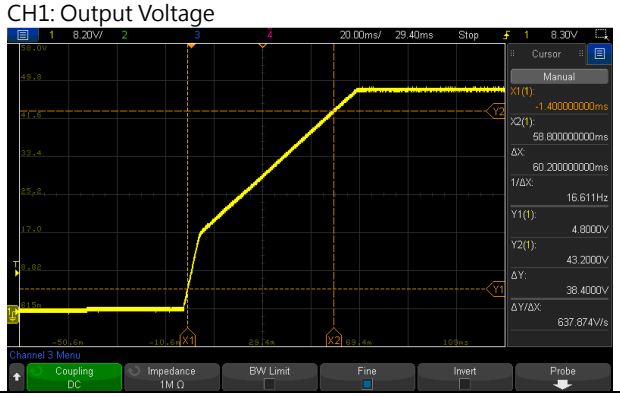

9	HOLD UP TIME (Typ.)	277VAC/ 15ms 230VAC/ 15ms 115VAC/ 15ms	I/P： 230 VAC I/P： 115 VAC O/P：FULL LOAD Ta：25℃	277VAC/ 32.8ms 230VAC/ 31.2ms 115VAC/ 29.6ms

INPUT=230VAC/50HZ @ FULL LOAD
CH1: Output Voltage CH3: AC Input Voltage

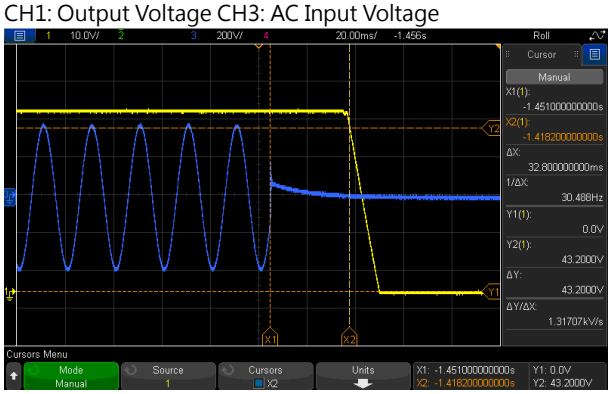

INPUT=115VAC/60HZ @ FULL LOAD
CH1: Output Voltage CH3: AC Input Voltage

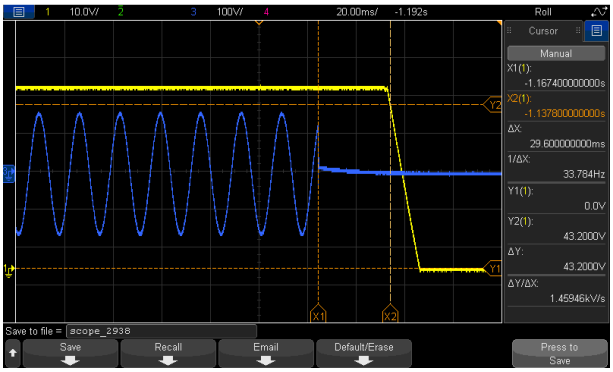

INPUT=230VAC/50HZ @ FULL LOAD
CH1: Output Voltage CH3: AC Input Voltage

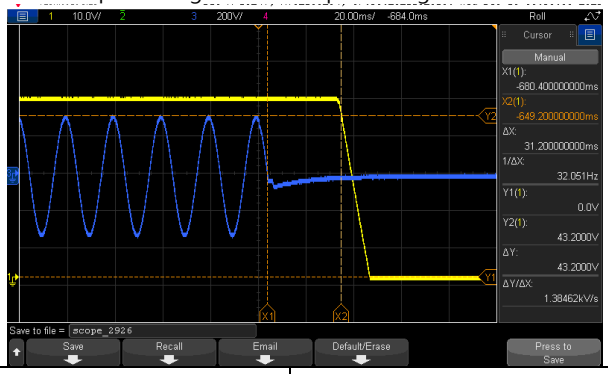

10	DYNAMIC LOAD	V1: 4800mVp-p	I/P: 230VAC O/P: (1) FULL/ MIN LOAD 50%DUTY / 120HZ (2) FULL/ MIN LOAD 50%DUTY / 1KHZ Ta:25℃	1010mVp-p 753mVp-p

FULL / MIN LOAD 50%DUTY / 120HZ

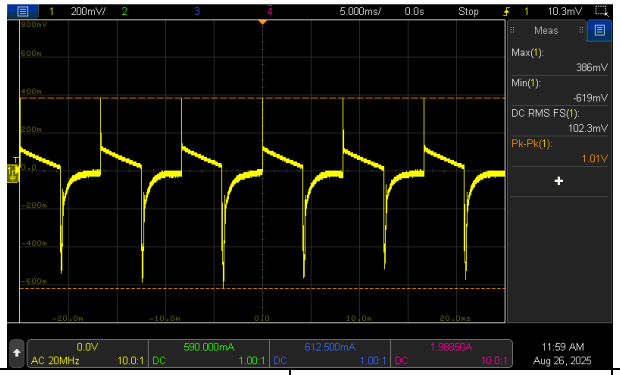

FULL / MIN LOAD 50%DUTY / 1KHZ

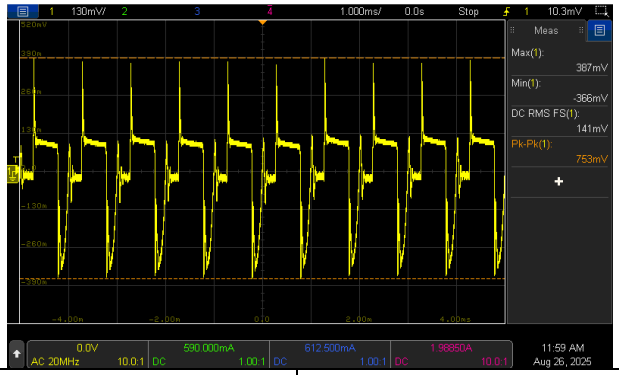

11	TRANSIENT RECOVERY TIME	V1: 4800mVp-p <500us	I/P: 230VAC O/P:40% LOAD CHANGE 50%DUTY/120HZ 1.25A/us	383mVp-p

INPUT FUNCTION TEST

NO	TEST ITEM	SPECIFICATION	TEST CONDITION	RESULT
1	INPUT VOLTAGE RANGE	85VAC~305VAC 80VDC~ 431VDC 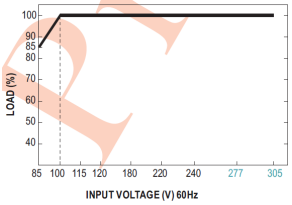 	(1) I/P: TESTING O/P: FULL / 85% LOAD (2) I/P: DC TESTING (L: + N: -) O/P: FULL / 85% LOAD (3) I/P: DC TESTING (L: - N: +) O/P: FULL / 85% LOAD Ta:25℃	(1) 78.2V~305V/ FULL LOAD 78.0V~305V/ 85% LOAD (2) 75.2Vdc~431Vdc/FULL LOAD 75.0Vdc~431Vdc/85% LOAD (3) 74.8Vdc~431Vdc/FULL LOAD 74.6Vdc~431Vdc/85% LOAD
			I/P: HIGH-LINE+10V=315V O/P:FULL/MIN LOAD (PLEASE CHECK DERATING CURVE) ON: 30 Sec OFF: 30 Sec 10MIN (POWER ON/OFF NO DAMAGE)	TEST：OK
		Derating 50% Load @80VDC	I/P: 80VDC O/P: 50% Load	TEST：OK
2	INPUT FREQUENCY RANGE	47HZ ~63 HZ NO DAMAGE	I/P: 85VAC~ 305VAC O/P:FULL~MIN LOAD Ta:25℃	TEST：OK
3	INPUT CURRENT (Typ.)	277V/ 2.5A 230V/ 3A 115V/ 6A	I/P： 230 VAC I/P： 115 VAC I/P： 277VAC O/P：FULL LOAD Ta：25℃	I =1.9489A/ 277VAC I =2.2211A/ 230VAC I =4.5136A/ 115VAC
4	LEAKAGE CURRENT	＜1mA@240Vac ＜1.5mA@277Vac	I/P：240VAC/60HZ I/P：277VAC/60HZ O/P：Min LOAD Ta：25℃	0.459mA@240Vac 0.529mA@277Vac
5	NO LOAD CONSUMPTION	Remote Power OFF: 1W@115Vac & 230Vac & 277Vac Remote Power ON: 3W@115Vac & 230Vac & 277Vac	I/P：115VAC I/P：230VAC I/P：277VAC O/P：NO LOAD Ta：25℃	TEST： Remote Power OFF / Remote Power ON 115VAC 0.622W 2.402W 230VAC 0.731W 2.409W 277VAC 0.808W 2.405W
6	POWER FACTOR (Typ.)	0.90/ 277VAC 0.95/ 230VAC 0.98/115VAC	I/P： 277 VAC I/P： 230 VAC I/P： 115 VAC O/P：FULL LOAD Ta：25℃	PF=0.9253/277VAC PF=0.9797/230VAC PF=0.9978/115VAC
	P.F vs LOAD			

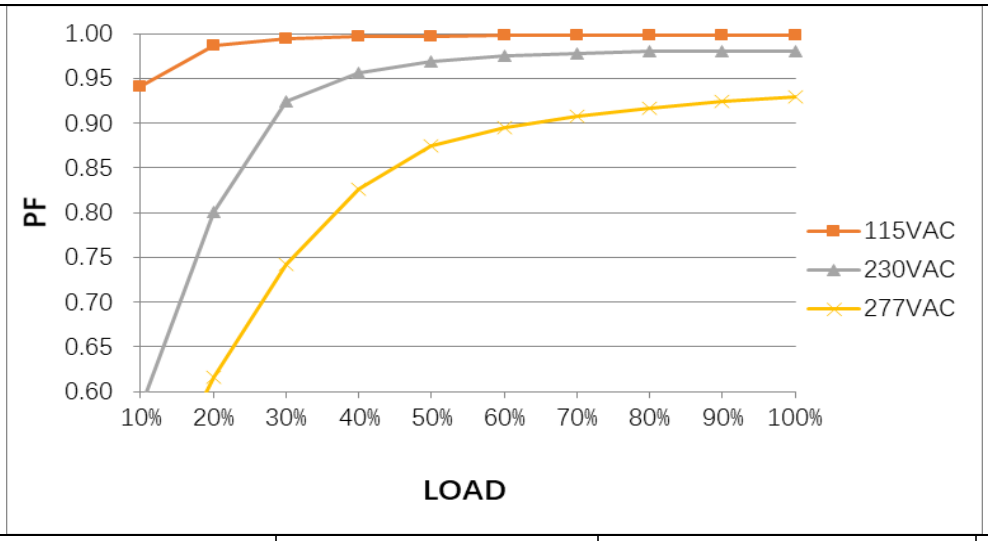

7	EFFICIENCY(Typ.)	96%	I/P:230 VAC O/P:FULL LOAD Ta:25℃	96.02%

EFFICIENCY vs LOAD

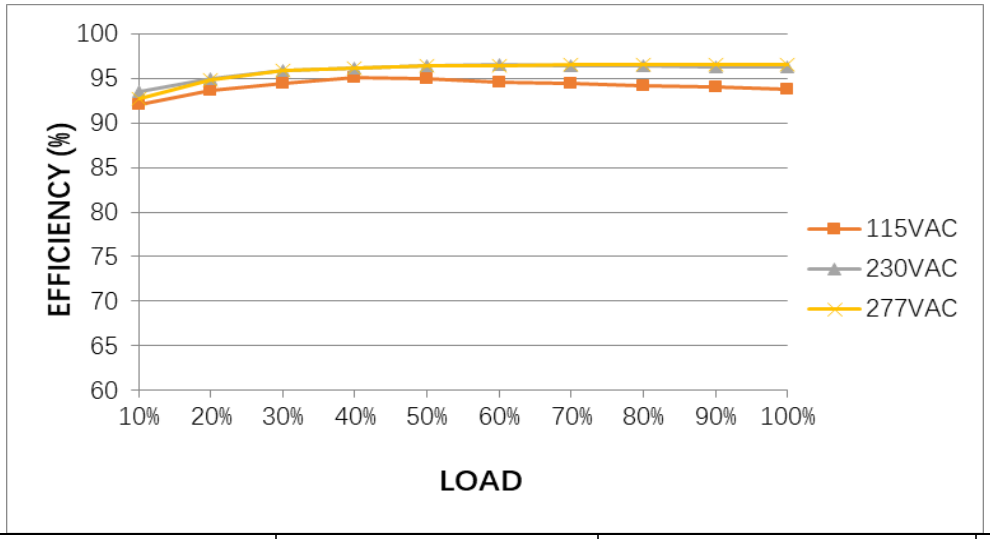

8	INRUSH CURRENT(Typ.)	277V/15A 230V/10A 115V/6A COLD START	I/P： 277 VAC I/P： 230 VAC I/P： 115 VAC O/P：FULL LOAD Ta：25℃	I =10.6/ 277VAC I =8.97A/ 230VAC I =4.49A/ 115VAC T50=2248us/230V

INPUT=277VAC/50HZ @ FULL LOAD
CH3: AC Input Voltage CH4: Input current

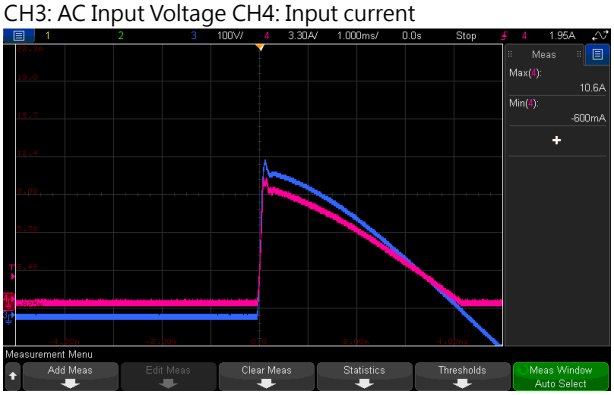

INPUT=230VAC/50HZ @ FULL LOAD
CH3: AC Input Voltage CH4: Input current

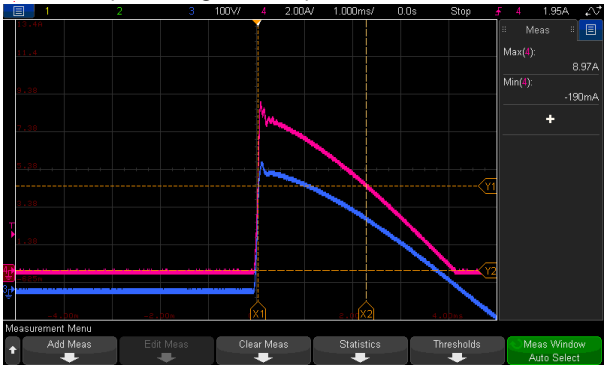

INPUT=115VAC/ 60HZ @ FULL LOAD

CH3: AC Input Voltage CH4: Input current

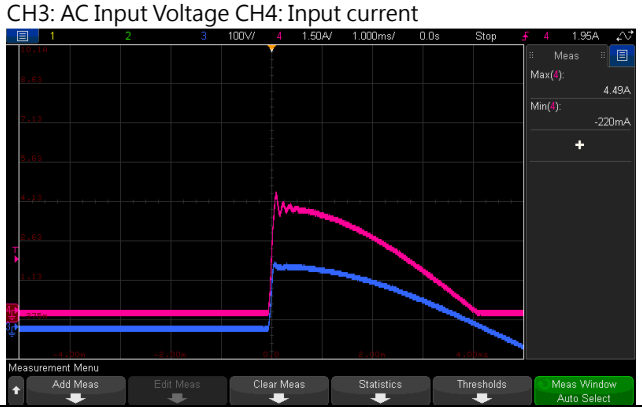

T50@230VAC：

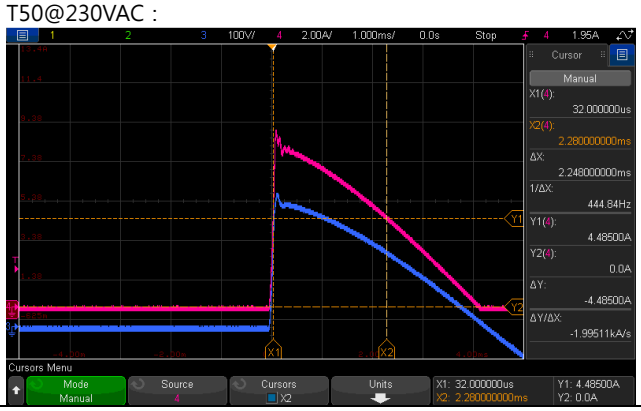

PROTECTION FUNCTION TEST

NO	TEST ITEM	SPECIFICATION	TEST CONDITION	RESULT
1	OVER LOAD PROTECTION	Protection type: 105%~200% rated output power for more than 5 sec then constant current limiting at rate current without shutdown when Vo=30%~100% ; Hiccup mode when Vo<30% rated voltage	I/P: 305VAC I/P: 230VAC I/P: 100VAC O/P:TESTING Ta:25℃	125.8%/305VAC 125.8%/230VAC 126.0%/100VAC Protection type: 105%~200% rated output power for more than 5 sec then constant current limiting at rate current without shutdown when Vo=30%~100% ; Hiccup mode when Vo<30% rated voltage
2	OVER VOLTAGE PROTECTION	57V~66V Protection type: Shut down o/p voltage, re-power on to recover	I/P: 305VAC I/P: 85VAC O/P:MIN LOAD Ta:25℃	60.8V/305VAC 60.8V/ 85VAC PROTECTION TYPE： Shut down o/p voltage, re-power on to recover
3	OVER TEMPERATURE PROTECTION	Protection type: Shut down o/p voltage, recovers automatically after temperature goes down	I/P: 305VAC I/P: 85VAC O/P:FULL LOAD	O.T.P. Active Protection type： Shut down o/p voltage, recovers automatically after temperature goes down
4	SHORT PROTECTION	SHORT EVERY OUTPUT 1 HOUR NO DAMAGE Protection type: Hiccup mode when Vo<30% rated voltage , recovers automatically after fault condition is removed	I/P: 305VAC I/P: 85VAC O/P:FULL LOAD	NO DAMAGE PROTECTION TYPE： Hiccup mode when Vo<30% rated voltage , recovers automatically after fault condition is removed
5	Protection against Inverse Voltages from the Load	Prevent PSU damage from Back Electro magnetic Force during deceleration of motor or inductive load	I/P: 230VAC O/P:TESTING Ta:25℃	TEST：OK

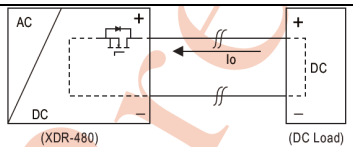

CONTROL FUNCTION TEST

NO	TEST ITEM	SPECIFICATION	TEST CONDITION	RESULT
1	DC OK CONTACT RATINGS	30VDC/1A，30VAC/0.5A RESISTIVE LOAD	I/P:230VAC O/P:FULL LOAD Ta:25℃	TEST: OK
2	REMOTE CONTROL	Power ON: Pin9 and Pin10 Short or keep 4~5Vdc Power OFF: Pin9 and Pin10 Open or keep < 0.5Vdc	I/P:230VAC O/P:FULL LOAD Ta:25℃	TEST: OK
3	PULSE CURRENT CAPABLILTY	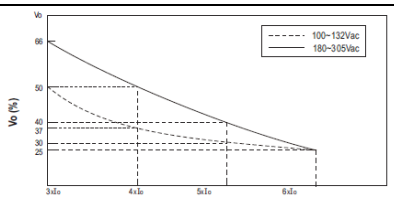 Peak current voltage dip Load / 100~132Vac Vo(%) / 180~305Vac Vo(%) / Time 3xIo / 50 / 66 / 100ms 4xIo / 37 / 50 / 70ms 5xIo / 30 / 40 / 40ms 6xIo / 25 / 25 / 15ms	I/P: 180VAC I/P: 100VAC O/P: TESTING Ta:25℃	**180VAC：** Load / Iout_Time(ms) 3xIo / 113.2 4xIo / 112.8 5xIo / 56.4 6xIo / 26.5 **100VAC：** Load / Iout_Time(ms) 3xIo / 112 4xIo / 85.6 5xIo / 59.4 6xIo / 26.9
4	PULSE CURRENT CAPABLILTY	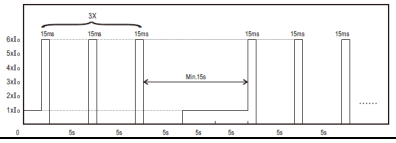	I/P:230VAC O/P: TESTING Ta:25℃	TEST：OK
5	LED Status Indictors	**LED：** Description / Output of alarm Restore Factory Settings / Green : 3 Blink/Pause DC OK / Green DC Fail / Red Overload (115Vac: >150% rated current) (230Vac: >200% rated current) / Red : 1 Blink/Pause Over voltage / Red : 2 Blink/Pause Over temperature / Red : 3 Blink/Pause Against Inverse Voltages From The Load / Red : 4 Blink/Pause High Ambient Temperature Warning / Red : Blink Others (Note) / Red : 5 Blink/Pause Note: Others include protection status AC UVP、Internal Communication error and EEPROM error.	I/P:230VA0C O/P: TESTING Ta:25℃	TEST：OK

6	PARALLEL	Up to 1920W(3+1), please refer to Function Manual for more details	I/P: TESTING O/P: TESTING LOAD Ta:25℃	TEST : OK
7	PEAK Power	I/P: 100/200VAC O/P: 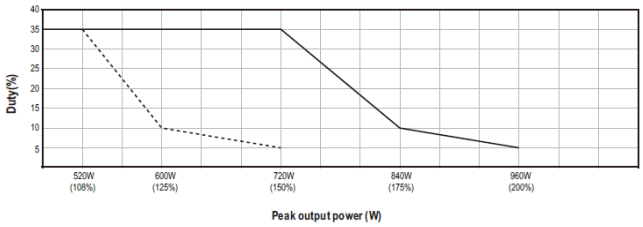 ------100VAC ———200VAC		TEST : OK

COMPONENT STRESS TEST

NO	TEST ITEM	SPECIFICATION	TEST CONDITION	RESULT	
1	PWM Transistor (D to S) or (C to E) Peak Voltage	Q5/Q6 : Rated: 45A/ 600V	AC ON/OFF I/P: High-Line +3V =308V VDS: O/P: (1)Full Load (2)Output Short (3) Dynamic Load Full Load/ Min. Load 90%Duty/1KHz (4) Dynamic Load Full Load/ Min. Load 90%Duty/3KHz (5) Dynamic Load Full Load/ Min. Load 90%Duty/5KHz (6) Dynamic Load 100% Load/ Min. Load 50%Duty/120Hz (7)0%→400% Load. (8) Peak Load Ta:25℃	Q5 VDS: (1) 525V (2) 545V (3) 529V (4) 537V (5) 525V (6) 525V (7) 529V (8) 521V	Q6 VDS: (1) 495V (2) 511V (3) 495V (4) 495V (5) 499V (6) 495V (7) 495V (8) 487V
2	P.F.C Transistor (D to S) or (C to E) Peak Voltage	Q1/Q2 : Rated: 31A/ 600V	AC ON/OFF I/P: High-Line +3V =308V VDS: O/P: (1)Full Load (2)Output Short (3) Dynamic Load Full Load/ Min. Load 90%Duty/1KHz (4) Dynamic Load Full Load/ Min. Load 90%Duty/3KHz (5) Dynamic Load Full Load/ Min. Load 90%Duty/5KHz (6) Dynamic Load 100% Load/ Min. Load 50%Duty/120Hz (7)0%→400% Load. (8) Peak Load Ta:25℃	Q1/Q2 VDS: (1) 475V (2) 491V (3) 487V (4) 467V (5) 471V (6) 499V (7) 491V (8) 471V	

3	P.F.C DIODE	D1： Rated: 10A/650V	I/P: High-Line +3V =308 V AC ON/OFF O/P: (1)Full Load (2)Output Short (3) Dynamic Load Full Load/ Min. Load 90%Duty/5KHz (4) Dynamic Load 100% Load/ Min. Load 50%Duty/120Hz (5) Peak Load Ta:25℃	(1) 456V (2) 452V (3) 448V (4) 456V (5) 460V	
4	Diode Peak Voltage	Q100/Q103: Rated: 150V/60A	AC ON/OFF I/P: High-Line +3V =308 V VO=Vomax O/P: (1)Full Load (2)Output Short (3) Dynamic Load Full Load/ Min. Load 90%Duty/1KHz (4) Dynamic Load Full Load/ Min. Load 90%Duty/3KHz (5) Dynamic Load Full Load/ Min. Load 90%Duty/5KHz (6) Dynamic Load 100% Load/ Min. Load 50%Duty/120Hz (7)0%→400% Load. (8).NO LOAD (9) Peak Load VO=Vonormal O/P: (1) Full Load Ta:25℃	Q100: VO=Vomax VDS: (1) 127V (2) 125V (3) 128V (4) 131V (5) 129V (6) 128V (7) 123V (8) 126V (9) 128V VO=Vonormal (1) 113.8V	Q103: VO=Vomax VDS: (1) 126V (2) 126V (3) 130V (4) 130V (5) 129V (6) 129V (7) 127V (8) 124V (9) 132V VO=Vonormal (1) 115V
5	Input Capacitor Voltage	C5： Rated: 150μ /450V	I/P: High-Line +3V =308V O/P: (1)Full Load input on/off (2) Min load input on /Off (3) Full Load /Min load Change (4) Full load continue (5) Peak Load on/off (6) Peak Load continue Ta:25℃	(1) 438V (2) 434V (3) 438V (4) 438V (5) 438V (6) 443V	
6	Control IC Voltage Test	PFC/PWM IC U1： Rated：12.5V~ 27.9V O/P IC U101： Rated：4.75V~38V IC U404： Rated：3V~36V AUX IC U2： Rated：5.65V~6.8V	AC ON/OFF I/P: High-Line +3V =308V O/P: (1) Full Load (2) Output Short (3) O.L.P (4) O.V.P. (5) No Load VR min (Low Line) Ta:25℃	U1 (1) 13.8V (2) 13.9V (3) 13.7V (4) 13.6V (5) 13.6V U101 (1) 15.4V (2) 15.9V (3) 15.5V	U2 (1) 6.46V (2) 6.48V (3) 6.48V (4) 6.54 V (5) 6.40V U9 (1) 3.307V (2) 3.307V (3) 3.307V

		MCU IC U9 : Rated : 2V~3.6V Level: 3.2835~3.3165V MCU IC U306: Rated : 2.4V~ 3.6V Level: 3.2835~3.3165V		(4) 14.4V (4) 3.307V (5) 15.3V (5) 3.307V U404 U306 (1) 5.97V (1) 3.303V (2) 5.61V (2) 3.303V (3) 5.61V (3) 3.303V (4) 5.53V (4) 3.303V (5) 5.61V (5) 3.303V

■ SAFETY& E.M.C. TEST

SAFETY TEST

NO	TEST ITEM	SPECIFICATION	TEST CONDITION	RESULT
1	WITHSTAND VOLTAGE	I/P-O/P: 4 KVAC/min I/P-FG : 2 KVAC/min O/P-FG:1.5 KVAC/min O/P-DC OK: 0.5 KVAC/min	I/P-O/P: 4.4 KVAC/min I/P-FG: 2.4 KVAC/min O/P-FG: 1.8 KVAC/min O/P-DC OK: 0.6 KVAC/min Ta:25℃	I/P-O/P: 2.99 mA I/P-FG: 2.37mA O/P-FG: 3.22mA O/P-DC OK: 0.007mA NO DAMAGE
2	ISOLATION RESISTANCE	I/P-O/P:500VDC>100MΩ I/P-FG: 500VDC>100MΩ O/P-FG:500VDC>100MΩ	I/P-O/P: 600 VDC I/P-FG: 600 VDC O/P-FG: 600 VDC Ta:25℃	I/P-O/P: 50GΩ I/P-FG: 50GΩ O/P-FG: 50GΩ NO DAMAGE
3	GROUNDING CONTINUITY	FG(PE) TO CHASSIS OR TRACE < 100mΩ	40A /2min Ta:25℃	14 mΩ

E.M.C TEST

NO	TEST ITEM	SPECIFICATION	TEST CONDITION	RESULT
1	HARMONIC	BS EN/EN61000-3-2 CLASS A	I/P:230VAC/50HZ O/P:FULL LOAD Ta:25℃	PASS
2	CONDUCTION	BS EN/EN55032 (CISPR32) BS EN/EN61204-3 CNS15936 CLASS B	I/P : 230 VAC (50HZ) O/P : FULL/50% LOAD Ta : 25℃	PASS Test by certified Lab
3	RADIATION	BS EN/EN55032 (CISPR32) BS EN/EN61204-3 CNS15936 CLASS B	I/P : 230 VAC (50HZ) O/P : FULL LOAD Ta : 25℃	PASS Test by certified Lab
4	E.S.D	BS EN/EN 61000-4-2 AIR : 15KV / Contact : 8KV	I/P : 230 VAC/50HZ O/P : FULL LOAD Ta : 25℃	CRITERIA A

5	E.F.T	BS EN/EN 61000-4-4 INPUT : 4KV	I/P : 230 VAC/50HZ O/P : FULL LOAD Ta : 25℃	CRITERIA A
6	SURGE	BS E /EN 61000-4-5 L-N : 2KV L,N-PE : 4KV	I/P : 230 VAC/50HZ O/P : FULL LOAD Ta : 25℃	CRITERIA A
7	Test by certified Lab & Test Report Prepare Any contradictions of the test results, please refer to the latest EMC test report			

■ RELIABILITY TEST

ENVIRONMENT TEST

NO	TEST ITEM	SPECIFICATION	TEST CONDITION	RESULT
1	TEMPERATURE RISE TEST	MODEL : XDR-480-48 1. ROOM AMBIENT BURN-IN : 2HRS I/P : 230VAC O/P : FULL LOAD Ta=23.3℃ 2. HIGH AMBIENT BURN-IN : 2HRS I/P : 230VAC O/P : FULL LOAD Ta=60.1℃		

NO	Position	ROOM AMBIENT Ta=23.3℃	HIGH AMBIENT Ta=60.1℃
1	Q2	56.1℃	90.6℃
2	Q1	52.0℃	89.0℃
3	D1	56.3℃	93.3℃
4	R6	52.8℃	91.6℃
5	Q5	53.5℃	93.0℃
6	L2	47.0℃	85.5℃
7	RTH3	52.2℃	89.8℃
8	L1	51.9℃	89.4℃
9	C5	49.0℃	85.7℃
10	T2	47.5℃	86.5℃
11	Q103	55.1℃	94.1℃
12	Q100	53.1℃	91.9℃
13	RTH5	51.5℃	89.1℃
14	U2	50.1℃	88.2℃
15	U101	52.4℃	91.0℃
16	U1	57.0℃	96.2℃
17	U8	55.6℃	93.5℃
18	T1coil	74.8℃	114.0℃
19	T1core	50.0℃	102.3℃
20	LF2	50.0℃	87.6℃
21	U9	49.1℃	87.1℃
22	BD1	54.2℃	91.1℃

NO	Position	ROOM AMBIENT Ta=23.3℃	HIGH AMBIENT Ta=60.1℃
23	LF100	48.9℃	89.4℃
24	C108	49.8℃	89.1℃
25	C105	49.8℃	88.3℃
26	C107	50.7℃	89.0℃
27	RG6	53.1℃	92.6℃
28	C109	47.2℃	87.6℃
29	J100	52.4℃	90.1℃
30	U4	49.9℃	87.5℃

2	OVER LOAD BURN-IN TEST	NO DAMAGE 1 HOUR (MIN)	I/P： 230 VAC O/P：123%LOAD Ta：25℃	TEST：OK
3	LOW TEMPERATURE TURN ON TEST	TURN ON AFTER 2 HOUR	I/P： 305VAC/100VAC O/P： 80%/100 %LOAD Ta= -45℃/-35℃	TEST：OK
4	HIGH HUMIDITY HIGH TEMPERATURE HIGH VOLTAGE TURN ON TEST	AFTER 12 HOURS IN CHAMBER ON CONTROL 60℃/95 %R.H NO DAMAGE	I/P： 315VAC O/P：FULL LOAD Ta= 60℃ HUMIDITY= 95 %R.H	TEST：OK
5	TEMPERATURE COEFFICIENT	± 0.03 %/℃(0~60℃)	I/P： 230 VAC O/P：FULL LOAD	± 0.006%/℃(0~60℃)
6	STORAGE TEMPERATURE TEST	-40~85℃	1. Thermal shock Temperature： -45℃~ +90℃ 2. Temperature change rate ：25℃ / MIN 3. Dwell time low and high temperature ： 30 MIN/EACH 4. Total test cycle：10 CYCLE 5. Input/Output condition： STATIC	
7	THERMAL SHOCK TEST	-30~60℃	1. Thermal shock Temperature： -35℃~ +65℃ 2. Temperature change rate ：25℃ / MIN 3. Dwell time low and high temperature ： 30 MIN/EACH 4. Total test cycle：16 CYCLE 5. Input/Output condition： 15cycle:230V/ FULL LOAD AC ON 3sec/AC OFF 1sec TEST 1cycle:230V/ FULL LOAD Burn In Test	
8	VIBRATION TEST	10 ~ 500Hz, 2G 10min./1cycle, 60min. each along X, Y, Z axes	1 Carton & 1 Set (1) Waveform： Sine Wave (2) Frequency：10~500Hz (3) Sweep Time：10min/sweep cycle (4) Acceleration：3G (5) Test Time：180min in each axis (X.Y.Z) (6) Ta：25℃	
9	CAPACITOR LIFE CYCLE	SUPPOSE C109 IS THE MOST CRITICAL COMPONENT (1) I/P： 230VAC O/P：FULL LOAD Ta= 25℃ LIFE TIME (2) I/P： 230VAC O/P：FULL LOAD Ta= 60℃ LIFE TIME (3) I/P： 230VAC O/P：75% LOAD Ta= 60℃ LIFE TIME (4) I/P： 230VAC O/P：50% LOAD Ta= 60℃ LIFE TIME		(1) 1636230 HRS (2) 112685 HRS (3) 178025 HRS (4) 237845 HRS
10	MTBF	Conducted by Parts Stress Analysis Prediction 1139.7K hrs min. Telcordia SR-332 (Bellcore) ; 154.5K hrs min. MIL-HDBK-217F (25℃)		

11	Ongoing Reliability Test	I/P：230VAC O/P：FULL LOAD TA=50℃ Demonstration Mean Time Between Failure : 50,000 hours

TEST RESULT	TESTER	REVIEW	APPROVAL
PASS	Hanxr	Liutt	Wangzd

2020.10.1 TAG-QA-009