Test Report: XDR-240-48

240W AC/DC High-End Ultra Slim Industrial DIN Rail Power

■ DESIGN VERIFY TEST

Output Function Test
Input Function Test
Protection Function Test
Control Function Test
Component Stress Test

■ SAFETY & E.M.C. TEST

Safety Test
E.M.C. Test

■ RELIABILITY TEST

ENVIRONMENT TEST

■ DESIGN VERIFY TEST

OUTPUT FUNCTION TEST

NO	TEST ITEM	SPECIFICATION	TEST CONDITION	RESULT
1	OUTPUT VOLTAGE ADJUST RANGE	CH1: 48V~55V	I/P : 277 VAC I/P : 230 VAC I/P : 115 VAC O/P : MIN LOAD Ta : 25℃	46.33V~57.35V/277VAC 46.32V~57.34V/230VAC 46.32V~57.34V/115VAC
2	OUTPUT VOLTAGE TOLERANCE	V1: -1% ~ +1%	I/P: 85VAC~305VAC O/P:FULL~MIN. LOAD Ta:25℃	V1: -0.10% ~ 0.10%
3	LINE REGULATION	V1: -0.5% ~ +0.5%	I/P: 85VAC~ 305VAC O/P:FULL LOAD Ta:25℃	V1: -0.004% ~ 0.006%
4	LOAD REGULATION	V1: -1% ~ +1%	I/P: 230VAC O/P:FULL ~MIN LOAD Ta:25℃	V1: -0.10% ~ 0.10%
5	OVER/UNDERSHOOT TEST	<±5%	I/P: 230VAC O/P:FULL LOAD / NO LOAD/ PEAK LOAD Ta:25℃	0.8%
6	RIPPLE & NOISE (Max)	V1: 150mVp-p	I/P:230VAC O/P:FULL LOAD Ta:25℃	19mVp-p / high frequency 43mVp-p / low frequency
	high frequency : 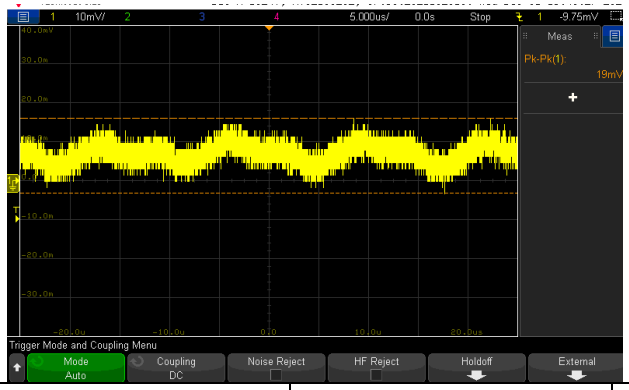 low frequency : 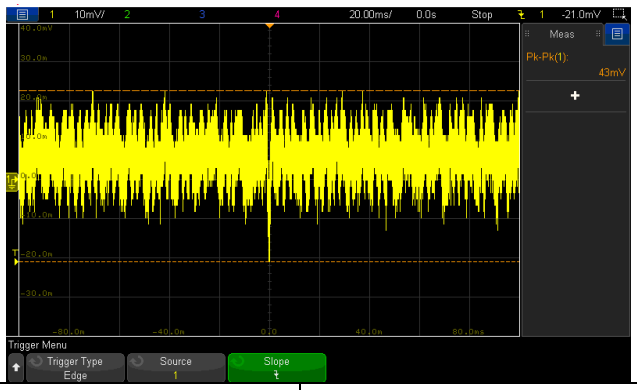			
7	SET UP TIME(Max)	277VAC/1500ms 230VAC/1500ms 115VAC/1500ms	I/P : 277 VAC I/P : 230 VAC I/P : 115 VAC O/P : FULL LOAD Ta : 25℃	277VAC/401.0 ms 230VAC/ 509.2ms 115VAC/ 560.9ms
	INPUT=277VAC/50HZ @ FULL LOAD CH1: Output Voltage CH3: AC Input Voltage		INPUT=115VAC/60HZ @ FULL LOAD CH1: Output Voltage CH3: AC Input Voltage	

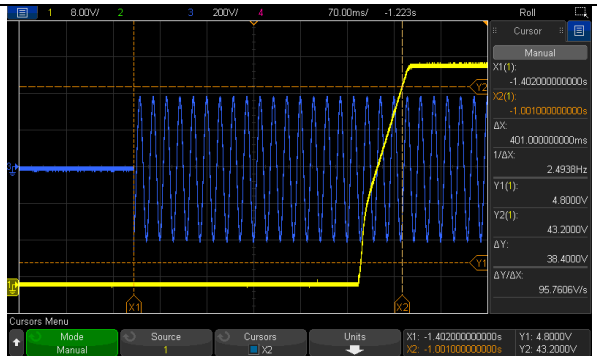

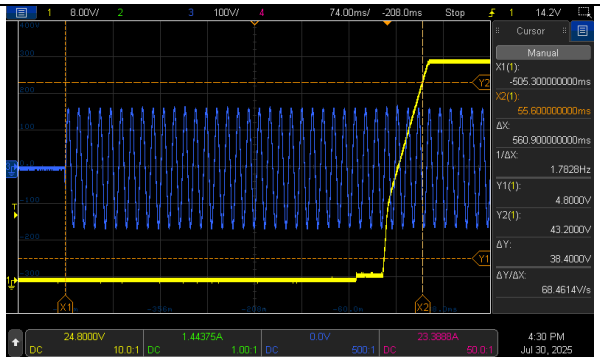

INPUT=230VAC/50HZ @ FULL LOAD

CH1: Output Voltage CH3: AC Input Voltage

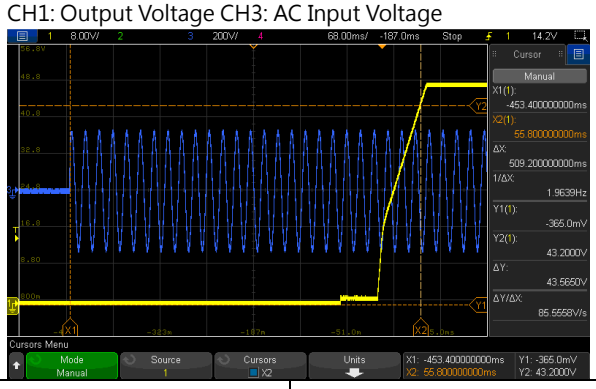

8	RISE TIME (Max)	277VAC/150ms 230VAC/150ms 115VAC/150ms	I/P： 277 VAC I/P： 230 VAC I/P： 115 VAC O/P：FULL LOAD Ta：25℃	277VAC/ 60.3ms 230VAC/ 60.2ms 115VAC/ 60.2ms

INPUT=277VAC/50HZ @ FULL LOAD

CH1: Output Voltage

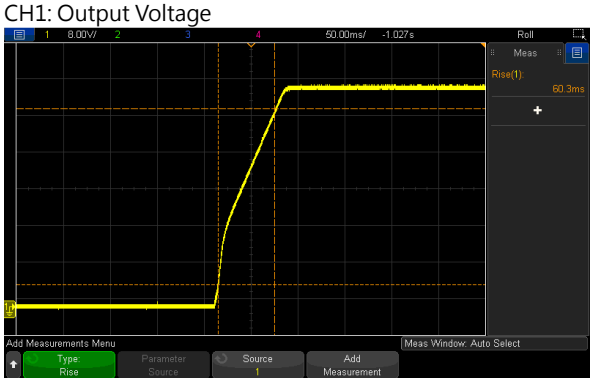

INPUT=115VAC/60HZ @ FULL LOAD

CH1: Output Voltage

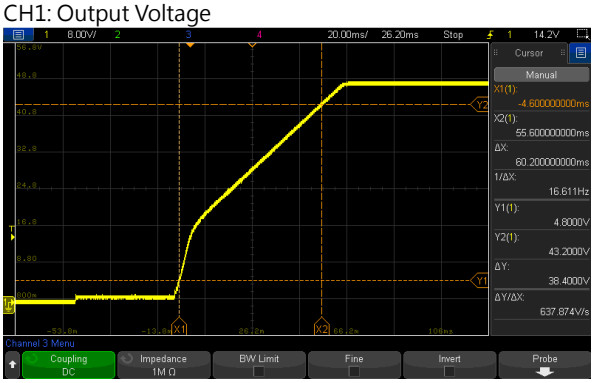

INPUT=230VAC/50HZ @ FULL LOAD

CH1: Output Voltage

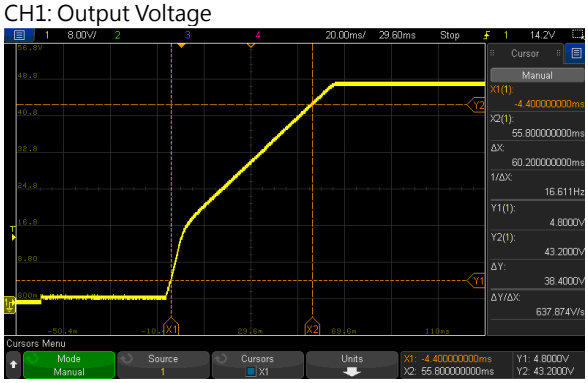

9	HOLD UP TIME (Typ.)	277VAC/ 20ms 230VAC/ 20ms 115VAC/ 20ms	I/P： 277 VAC I/P： 230 VAC I/P： 115 VAC O/P：FULL LOAD Ta：25℃	230VAC/ 37.60ms 230VAC/ 30.56ms 115VAC/ 30.36ms

INPUT=277VAC/50HZ @ FULL LOAD

CH1: Output Voltage CH3: AC Input Voltage

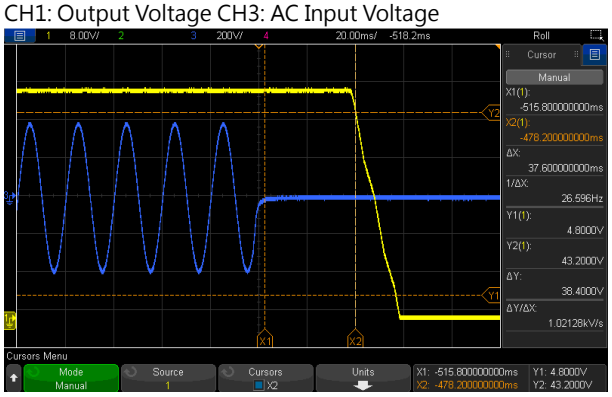

INPUT=115VAC/60HZ @ FULL LOAD

CH1: Output Voltage CH3: AC Input Voltage

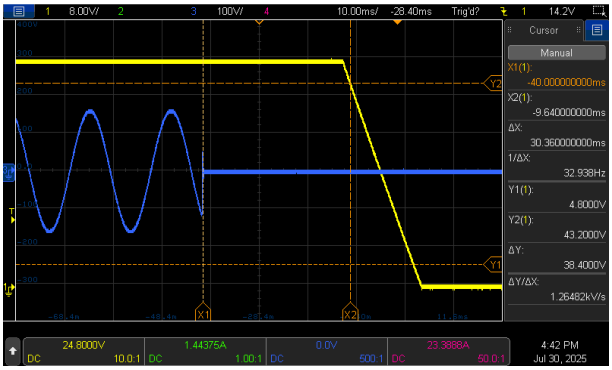

INPUT=230VAC/50HZ @ FULL LOAD

CH1: Output Voltage CH3: AC Input Voltage

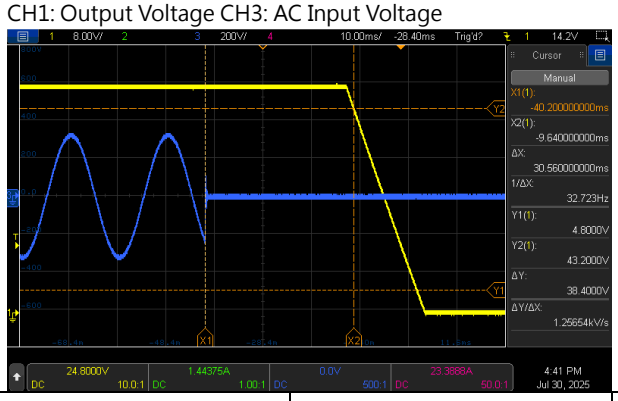

10	DYNAMIC LOAD	V1: 4800mVp-p	I/P: 230VAC O/P: (1) FULL/ MIN LOAD 50%DUTY / 120HZ (2) FULL/ MIN LOAD 50%DUTY / 1KHZ Ta:25℃	482mVp-p 507mVp-p

FULL / MIN LOAD 50%DUTY / 120HZ

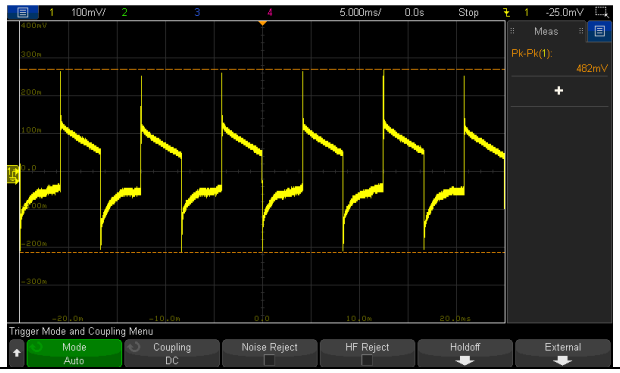

FULL / MIN LOAD 50%DUTY / 1KHZ

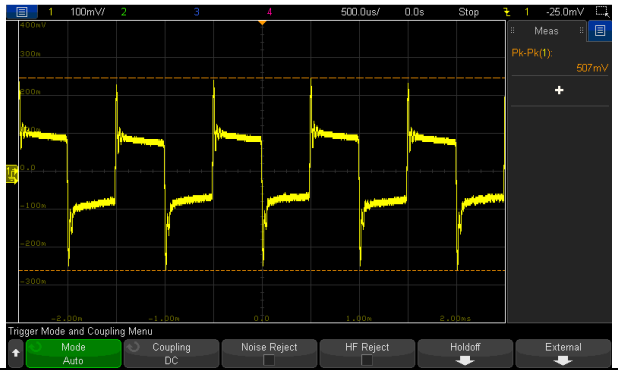

11	TRANSIENT RECOVERY TIME	V1: 4800mVp-p ＜500us	I/P: 230VAC O/P:40% LOAD CHANGE 50%DUTY/120HZ 1.25A/us	271mVp-p

INPUT FUNCTION TEST

NO	TEST ITEM	SPECIFICATION	TEST CONDITION	RESULT
1	INPUT VOLTAGE RANGE	85VAC~305VAC 80VDC~ 431VDC 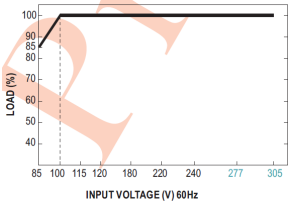 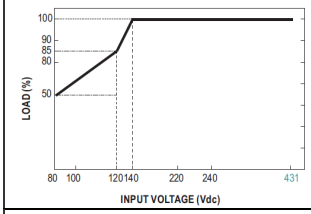 	(1) I/P: TESTING O/P: FULL / 85% LOAD (2) I/P: DC TESTING (L: + N: -) O/P: FULL / 85% LOAD (3) I/P: DC TESTING (L: - N: +) O/P: FULL / 85% LOAD Ta:25℃	(1) 78V~305V/ FULL LOAD 78V~305V/ 85% LOAD (2) 76.9Vdc~431Vdc/FULL LOAD 76.9Vdc~431Vdc/85% LOAD (3)76.9 Vdc~431Vdc/FULL LOAD 76.9Vdc~431Vdc/85% LOAD
			I/P: HIGH-LINE+10V=315V O/P:FULL/MIN LOAD (PLEASE CHECK DERATING CURVE) ON: 30 Sec OFF: 30 Sec 10MIN (POWER ON/OFF NO DAMAGE)	TEST：OK
		Derating 50% Load @80VDC	I/P: 80VDC O/P: 50% Load	TEST：OK
2	INPUT FREQUENCY RANGE	47HZ ~63 HZ NO DAMAGE	I/P: 85VAC~ 305VAC O/P:FULL~MIN LOAD Ta:25℃	TEST：OK
3	INPUT CURRENT (Typ.)	277V/ 1.1A 230V/ 1.3A 115V/ 2.6A	I/P： 277 VAC I/P： 230 VAC I/P： 115 VAC O/P：FULL LOAD Ta：25℃	0.99A/ 277VAC 1.12A/ 230VAC 2.21A/ 115VAC
4	LEAKAGE CURRENT	＜1mA@240Vac ＜1.3mA@277Vac	I/P：240VAC/60HZ I/P：277VAC/60HZ O/P：Min LOAD Ta：25℃	0.723mA@240Vac 0.835mA@277Vac
5	NO LOAD CONSUMPTION	Remote Power OFF: 1W@115Vac & 230Vac Remote Power ON: 2.5W@115Vac & 230Vac	I/P：115VAC I/P：230VAC I/P：277VAC O/P：NO LOAD Ta：25℃	TEST： Remote Power OFF / Remote Power ON 115VAC 0.561W 1.482W 230VAC 0.665W 1.698W 277VAC 0.712W 1.519W
6	POWER FACTOR (Typ.)	0.9/277VAC 0.95/ 230VAC 0.98/115VAC	I/P： 277VAC I/P： 230 VAC I/P： 115 VAC O/P：FULL LOAD Ta：25℃	PF=0.9186/277VAC PF=0.9784/230VAC PF=0.9981/115VAC

P.F vs LOAD

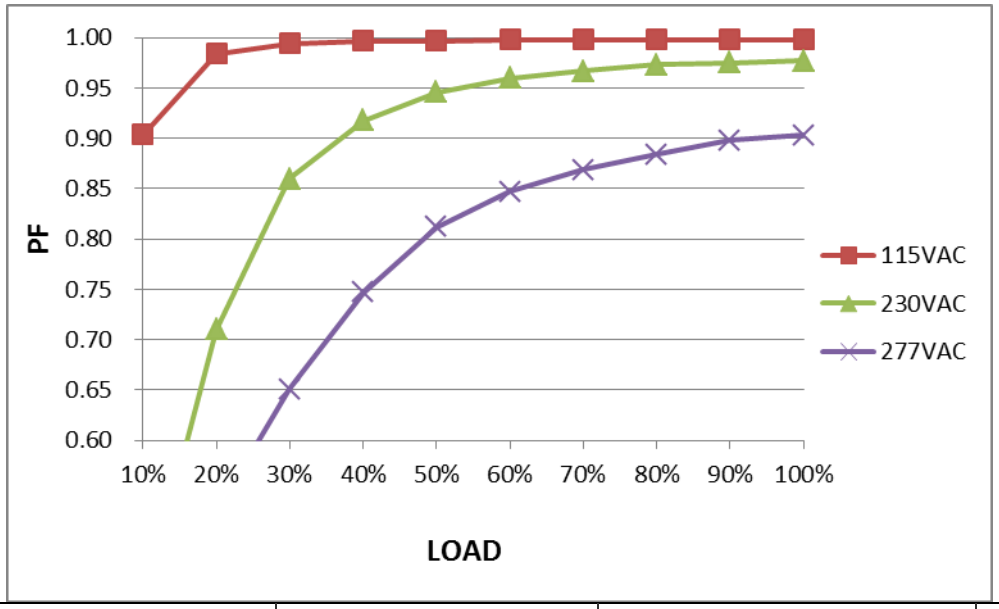

7	EFFICIENCY(Typ.)	95.5%	I/P:230 VAC O/P:FULL LOAD Ta:25℃	95.6%

EFFICIENCY vs LOAD

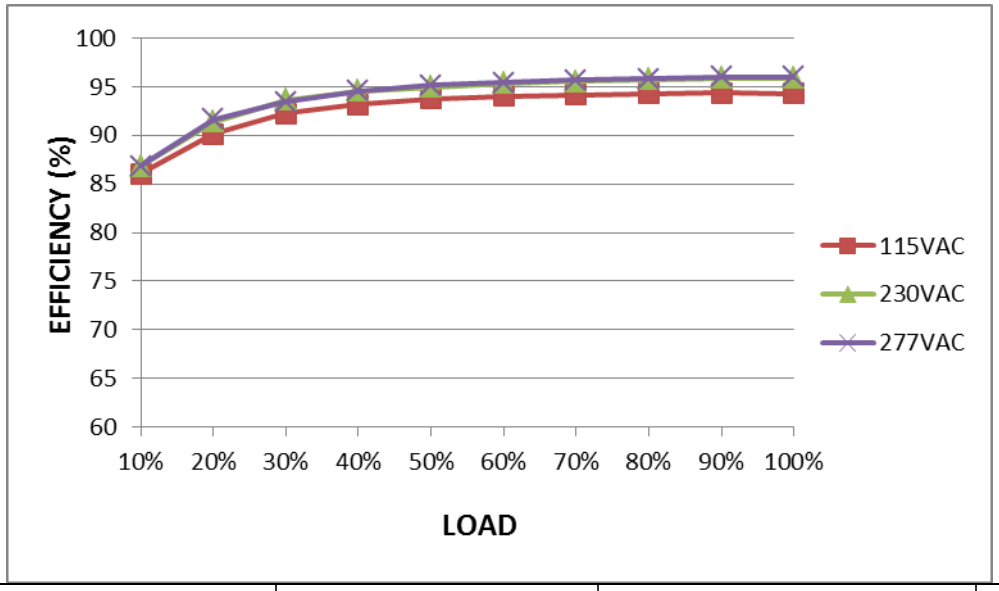

8	INRUSH CURRENT(Typ.)	277V/15A 230V/10A 115V/6A COLD START	I/P： 277 VAC I/P： 230 VAC I/P： 115 VAC O/P：FULL LOAD Ta：25℃	I =11.1A / 277VAC I =9.18A / 230VAC I =4.45A / 115VAC T50=2016us/230V

INPUT=277VAC/50HZ @ FULL LOAD
CH1: AC Input Voltage CH4: Input current

INPUT=230VAC/50HZ @ FULL LOAD
CH1: AC Input Voltage CH4: Input current

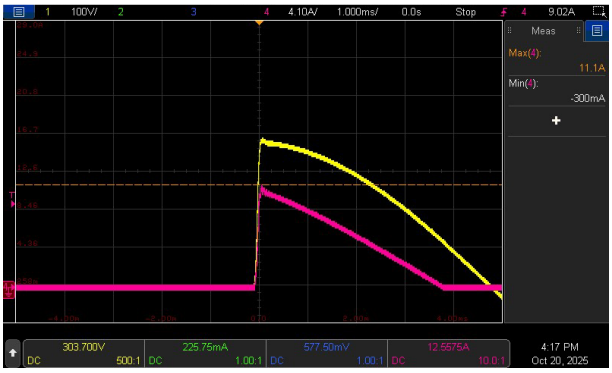

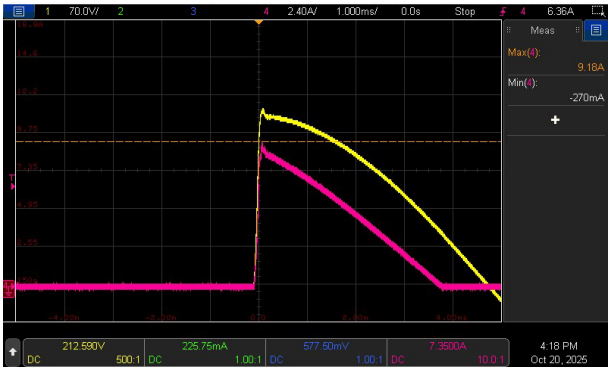

INPUT=115VAC/ 60HZ @ FULL LOAD
CH1: AC Input Voltage CH4: Input current

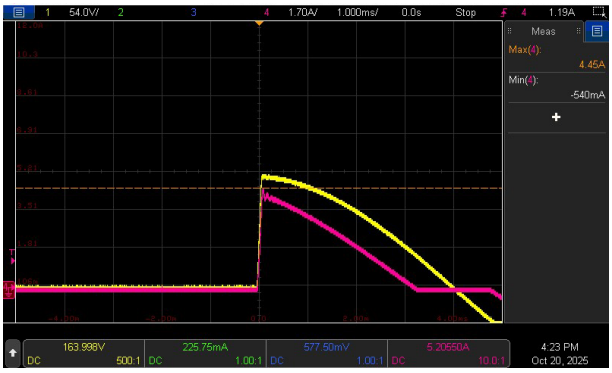

T50@230VAC：

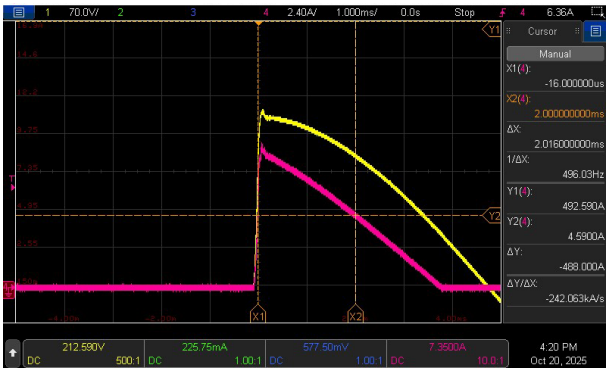

PROTECTION FUNCTION TEST

NO	TEST ITEM	SPECIFICATION	TEST CONDITION	RESULT
1	OVER LOAD PROTECTION	Protection type: 105%~200% rated output power for more than 5 sec then constant current limiting at rate current without shutdown when Vo=30%~100%； Hiccup mode when Vo<30% rated voltage	I/P: 305VAC I/P: 230VAC I/P: 100VAC O/P:TESTING Ta:25℃	TEST： 128%/305VAC 128%/230VAC 128%/100VAC Protection type: 105%~200% rated output power for more than 5 sec then constant current limiting at rate current without shutdown when Vo=30%~100%； Hiccup mode when Vo<30% rated voltage
2	OVER VOLTAGE PROTECTION	57V~66V Protection type: Shut down o/p voltage, re-power on to recover	I/P: 305VAC I/P: 85VAC O/P:MIN LOAD Ta:25℃	60.2V/ 305VAC 60.2V/ 85VAC PROTECTION TYPE： Shut down o/p voltage, re-power on to recover
3	OVER TEMPERATURE PROTECTION	Protection type: Shut down o/p voltage, recovers automatically after temperature goes down	I/P: 305VAC I/P: 85VAC O/P:FULL LOAD	O.T.P. Active OK Protection type： Shut down o/p voltage, recovers automatically after temperature

				goes down
4	SHORT PROTECTION	SHORT EVERY OUTPUT 1 HOUR NO DAMAGE Protection type: Hiccup mode when Vo<30% rated voltage ,recovers automatically after fault condition is removed	I/P: 305VAC I/P: 85VAC O/P:FULL LOAD	NO DAMAGE PROTECTION TYPE : Hiccup mode when Vo<30% rated voltage , recovers automatically after fault condition is removed
5	Protection against Inverse Voltages from the Load	Prevent PSU damage from Back Electro magnetic Force during deceleration of motor or inductive load 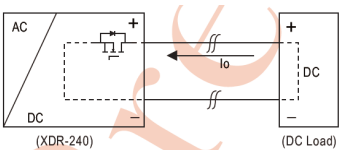	I/P: 230VAC O/P:TESTING Ta:25℃	TEST : OK

CONTROL FUNCTION TEST

NO	TEST ITEM	SPECIFICATION	TEST CONDITION	RESULT
1	DC OK CONTACT RATINGS	30VDC/1A , 30VAC/0.5A RESISTIVE LOAD	I/P:230VAC O/P:FULL LOAD Ta:25℃	TEST: OK
2	REMOTE CONTROL	Power ON: Pin9 and Pin10 Short or keep 4~5Vdc Power OFF: Pin9 and Pin10 Open or keep < 0.5Vdc	I/P:230VAC O/P:FULL LOAD Ta:25℃	TEST: OK
3	PULSE CURRENT CAPABLILTY	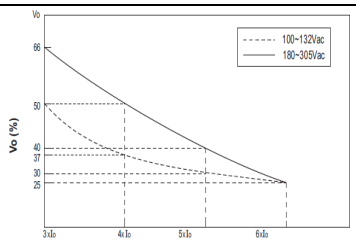 Peak current voltage dip Load / 100~132Vac Vo(%) / 180~305Vac Vo(%) / Time 3xIo / 50 / 66 / 100ms 4xIo / 37 / 50 / 70ms 5xIo / 30 / 40 / 40ms 6xIo / 25 / 25 / 15ms	I/P: 180VAC I/P: 100VAC O/P: TESTING Ta:25℃	**180V :** Load / Iout_Time(ms) 3xIo / 115.4 4xIo / 89.0 5xIo / 58.9 6xIo / 33.8 **100V :** Load / Iout_Time(ms) 3xIo / 123.4 4xIo / 83.2 5xIo / 52.2 6xIo / 25.3

4	PULSE CURRENT CAPABLILTY	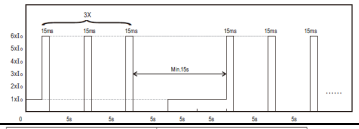	I/P:230VAC O/P: TESTING Ta:25℃	TEST : OK
5	LED Status Indictors	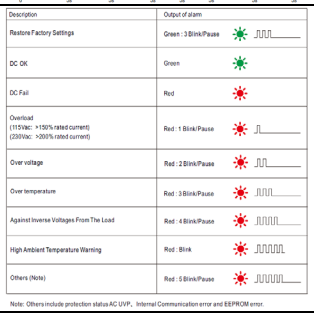	I/P:230VA0C O/P: TESTING Ta:25℃	TEST: OK
6	PARALLEL	Up to 960W (3+1), please refer to Function Manual for more details	I/P: TESTING O/P: TESTING LOAD Ta:25℃	TEST: OK
7	PEAK Power	I/P: 100/200VAC O/P: 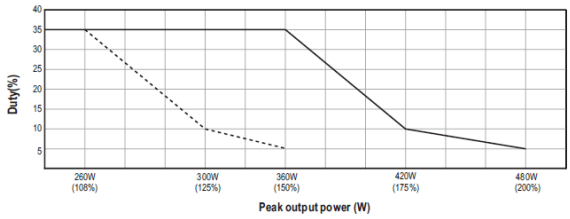 ------100VAC ———200VAC		TEST: OK

COMPONENT STRESS TEST

NO	TEST ITEM	SPECIFICATION	TEST CONDITION	RESULT	
1	PWM Transistor (D to S) or (C to E) Peak Voltage	Q5/Q6 : Rated: 600V/21A	AC ON/OFF I/P: High-Line +3V =308V VDS: O/P: (1)Full Load (2)Output Short (3) Dynamic Load Full Load/ Min. Load 90%Duty/1KHz (4) Dynamic Load Full Load/ Min. Load 90%Duty/3KHz (5) Dynamic Load Full Load/ Min. Load 90%Duty/5KHz (6) Dynamic Load 100% Load/ Min. Load 50%Duty/120Hz (7)0%→400% Load. (8) Peak Load Ta:25℃	Q5 VDS: (1) 535V (2) 527V (3) 539V (4) 539V (5) 539V (6) 539V (7) 523V (8) 535V	Q6 VDS: (1) 511V (2) 511V (3) 507V (4) 507V (5) 507V (6) 503V (7) 507V (8) 519V
2	P.F.C Transistor (D to S) or (C to E) Peak Voltage	Q1 : Rated: 600V/34A	AC ON/OFF I/P: High-Line +3V =308V VDS: O/P: (1)Full Load	Q1 VDS: (1) 471V (2) 435V	

			(2)Output Short (3) Dynamic Load Full Load/ Min. Load 90%Duty/1KHz (4) Dynamic Load Full Load/ Min. Load 90%Duty/3KHz (5) Dynamic Load Full Load/ Min. Load 90%Duty/5KHz (6) Dynamic Load 100% Load/ Min. Load 50%Duty/120Hz (7)0%→400% Load. (8) Peak Load Ta:25℃	(3) 471V (4) 471V (5) 471V (6) 471V (7) 471V (8) 471V
3	P.F.C DIODE	D1： Rated: 4A/650V	I/P: High-Line +3V =308 V AC ON/OFF O/P: (1)Full Load (2)Output Short (3) Dynamic Load Full Load/ Min. Load 90%Duty/5KHz (4) Dynamic Load 100% Load/ Min. Load 50%Duty/120Hz (5) Peak Load Ta:25℃	(1) 446V (2) 436V (3) 449V (4) 449V (5) 446V
4	Diode Peak Voltage	Q101: Rated: 150V/45A Q103: Rated: 200V/74A	AC ON/OFF I/P: High-Line +3V =308 V VO=Vomax O/P: (1)Full Load (2)Output Short (3) Dynamic Load Full Load/ Min. Load 90%Duty/1KHz (4) Dynamic Load Full Load/ Min. Load 90%Duty/3KHz (5) Dynamic Load Full Load/ Min. Load 90%Duty/5KHz (6) Dynamic Load 100% Load/ Min. Load 50%Duty/120Hz (7)0%→400% Load. (8).NO LOAD (9) Peak Load VO=Vonormal O/P: (1) Full Load Ta:25℃	Q101: VO=Vomax VDS: (1) 138V (2) 137V (3) 139V (4) 140V (5) 140V (6) 138V (7) 138V (8) 131V (9) 141V VO=Vonormal (1) 123V Q103: VO=Vomax VDS: (1) 128.5V (2) 128.5V (3) 131.4V (4) 131.4V (5) 132.4V (6) 130.5V (7) 140.1V (8) 130.5V (9) 140.1V VO=Vonormal (1) 122.8V
5	AUX Transistor (D to S) or (C to E) Peak Voltage	U2： Rated: 725V/654mA	AC ON/OFF I/P: High-Line +3V =308V VDS: O/P: (1)Full Load (2)Output Short (3) Dynamic Load Full Load/ Min. Load 90%Duty/1KHz (4) Dynamic Load Full Load/	VDS: (1) 584V (2) 558V (3) 580V (4) 580V (5) 584V (6) 580V (7) 562V

			Min. Load 90%Duty/3KHz (5) Dynamic Load Full Load/ Min. Load 90%Duty/5KHz (6) Dynamic Load 100% Load/ Min. Load 50%Duty/120Hz (7)0%→400% Load. (8) Peak Load Ta:25℃	(8) 580V
6	AUX Clamp Diode Peak Voltage	D 19： Rated：1A/ 600V	AC ON/OFF I/P：High-Line +3V = 308V O/P： (1) Dynamic Load 90%Duty/1KHz (2) Full load continue Ta：25℃	(1) 569V (2) 560V
7	AUX Diode Peak Voltage	D200： Rated：1A/200V D22： Rated：2A/200V	AC ON/OFF I/P: High-Line +3V =308 V O/P: (1)Full Load (2)Output Short (3) Dynamic Load Full Load/ Min. Load 90%Duty/1KHz (4) Dynamic Load Full Load/ Min. Load 90%Duty/3KHz (5) Dynamic Load Full Load/ Min. Load 90%Duty/5KHz (6) Dynamic Load 100% Load/ Min. Load 50%Duty/120Hz (7)0%→400% Load. (8).NO LOAD (9) Peak Load Ta:25℃	D200: (1) 118.7V (2) 117.8V (3) 117.8V (4) 118.5V (5) 118.5V (6) 119.2V (7) 117.8V (8) 117.1V (9) 120.0V D22: (1) 125.2V (2) 131.7V (3) 125.2V (4) 124.4V (5) 126.9V (6) 123.6V (7) 125.2V (8) 122.0V (9) 122.0V
8	Input Capacitor Voltage	C5： Rated: 100μ /450V	I/P: High-Line +3V =308V O/P: (1)Full Load input on/off (2) Min load input on /Off (3) Full Load /Min load Change (4) Full load continue (5) Peak Load on/off (6) Peak Load continue Ta:25℃	(1) 435V (2) 435V (3) 435V (4) 435V (5) 439V (6) 439V
9	Control IC Voltage Test	PFC/PWM IC U1： Rated：12.5V~ 27.9V O/P IC U101： Rated：4.75V~38V IC U404： Rated：3V~36V MCU IC U9： Rated：2V~3.6V	AC ON/OFF I/P: High-Line +3V =308V O/P: (1) Full Load (2) Output Short (3) O.L.P (4) O.V.P. (5) No Load VR min (Low Line) MCU： (1) Full Load (2) Output Short	U1 (1) 13.5V (2) 13.5V (3) 13.4V (4) 13.5V (5) 13.5V U101 (1) 14.8V (2) 14.8V (3) 13.8V U9 (1) 3.306V (2) 3.306V (3) 3.306V (4) 3.306V (5) 3.306V U306 (1) 3.298V (2) 3. 298V (3) 3. 298V

		Level：3.2835~3.3165V MCU IC U306: Rated：2.4V~ 3.6V Level：3.2835~3.3165V	(3) O.L.P (4) O.V.P. (5) No Load VR min (LOW LINE) Ta:25℃	(4) 13.8V (5) 14.8V U404 (1) 5.45V (2) 5.45V (3) 5.45V (4) 5.45V (5) 5.45V	(4) 3. 298V (5) 3. 298V

■ SAFETY& E.M.C. TEST

SAFETY TEST

NO	TEST ITEM	SPECIFICATION	TEST CONDITION	RESULT
1	WITHSTAND VOLTAGE	I/P-O/P: 4 KVAC/min I/P-FG : 2 KVAC/min O/P-FG:1.5 KVAC/min O/P-DC OK: 0.5 KVAC/min	I/P-O/P: 4.4 KVAC/min I/P-FG: 2.4 KVAC/min O/P-FG: 1.8 KVAC/min O/P-DC OK: 0.6 KVAC/min Ta:25℃	I/P-O/P: 3.98mA I/P-FG: 3.70mA O/P-FG: 3.96mA O/P-DC OK: 0.006mA NO DAMAGE
2	ISOLATION RESISTANCE	I/P-O/P:500VDC>100MΩ I/P-FG: 500VDC>100MΩ O/P-FG:500VDC>100MΩ	I/P-O/P: 600 VDC I/P-FG: 600 VDC O/P-FG: 600 VDC Ta:25℃	I/P-O/P: 50GΩ I/P-FG: 50GΩ O/P-FG: 50GΩ NO DAMAGE
3	GROUNDING CONTINUITY	FG(PE) TO CHASSIS OR TRACE < 100mΩ	40A /2min Ta:25℃	6 mΩ

E.M.C TEST

NO	TEST ITEM	SPECIFICATION	TEST CONDITION	RESULT
1	HARMONIC	BS EN/EN61000-3-2 CLASS A	I/P:230VAC/50HZ O/P:FULL LOAD Ta:25℃	PASS
2	CONDUCTION	BS EN/EN55032 (CISPR32) BS EN/EN61204-3 CNS15936 CLASS B	I/P： 230 VAC (50HZ) O/P：FULL/50% LOAD Ta：25℃	PASS Test by certified Lab
3	RADIATION	BS EN/EN55032 (CISPR32) BS EN/EN61204-3 CNS15936 CLASS B	I/P： 230 VAC (50HZ) O/P：FULL LOAD Ta：25℃	PASS Test by certified Lab
4	E.S.D	BS EN/EN 61000-4-2 AIR：15KV / Contact：8KV	I/P： 230 VAC/50HZ O/P：FULL LOAD Ta：25℃	CRITERIA A

5	E.F.T	BS EN/EN 61000-4-4 INPUT : 4KV	I/P : 230 VAC/50HZ O/P : FULL LOAD Ta : 25℃	CRITERIA A
6	SURGE	BS E /EN 61000-4-5 L-N : 2KV L,N-PE : 4KV	I/P : 230 VAC/50HZ O/P : FULL LOAD Ta : 25℃	CRITERIA A
7	Test by certified Lab & Test Report Prepare Any contradictions of the test results, please refer to the latest EMC test report			

■ RELIABILITY TEST

ENVIRONMENT TEST

NO	TEST ITEM	SPECIFICATION	TEST CONDITION	RESULT
1	TEMPERATURE RISE TEST	MODEL : XDR-240-48 1. ROOM AMBIENT BURN-IN : 2HRS I/P : 230VAC O/P : FULL LOAD Ta=22.2 ℃ 2. HIGH AMBIENT BURN-IN : 2HRS I/P : 230VAC O/P : FULL LOAD Ta=60.2 ℃		

NO	Position	ROOM AMBIENT Ta=22.2℃	HIGH AMBIENT Ta=60.2℃
1	Q6	44.3℃	81.6℃
2	Q5	43.8℃	81.1℃
3	T1ciol	54.9℃	91.6℃
4	T1core	46.1℃	82.5℃
5	C107	43.2℃	79.7℃
6	C202	42.6℃	80.6℃
7	C6	42.0℃	79.2℃
8	C109	43.0℃	80.3℃
9	Q1	45.7℃	83.6℃
10	L1	46.6℃	84.0℃
11	L2	42.5℃	80.4℃
12	RTH3	45.5℃	82.7℃
13	BD1	48.0℃	84.9℃
14	U1	51.2℃	88.1℃
15	U4	42.3℃	79.8℃
16	U2	46.0℃	83.5℃
17	RTH5	44.1℃	81.3℃
18	Q102	45.0℃	82.0℃
19	U306	46.1℃	83.1℃
20	RY100	44.9℃	80.4℃
21	U400	47.0℃	84.4℃
22	LF100	54.1℃	90.6℃

2	OVER LOAD BURN-IN TEST	NO DAMAGE 1 HOUR (MIN)	I/P： 230 VAC O/P：123%LOAD Ta：25℃	TEST：OK
3	LOW TEMPERATURE TURN ON TEST	TURN ON AFTER 2 HOUR	I/P： 305VAC/100VAC O/P：80%100%LOAD Ta= -45℃/-35℃	TEST：OK
4	HIGH HUMIDITY HIGH TEMPERATURE HIGH VOLTAGE TURN ON TEST	AFTER 12 HOURS IN CHAMBER ON CONTROL 60℃/95 %R.H NO DAMAGE	I/P： 315VAC O/P：FULL LOAD Ta= 60℃ HUMIDITY= 95 %R.H	TEST：OK
5	TEMPERATURE COEFFICIENT	±0.03%/℃(0~60℃)	I/P： 230 VAC O/P：FULL LOAD	±0.002%/℃(0~60℃)
6	STORAGE TEMPERATURE TEST	-40~85℃	1. Thermal shock Temperature： -45℃~ +90℃ 2. Temperature change rate ：25℃ / MIN 3. Dwell time low and high temperature ： 30 MIN/EACH 4. Total test cycle：10 CYCLE 5. Input/Output condition： STATIC	
7	THERMAL SHOCK TEST	-30~60℃	1. Thermal shock Temperature： -35℃~ +65℃ 2. Temperature change rate ：25℃ / MIN 3. Dwell time low and high temperature ： 30 MIN/EACH 4. Total test cycle：16 CYCLE 5. Input/Output condition： 15cycle:230V/ FULL LOAD AC ON 3sec/AC OFF 1sec TEST 1cycle:230V/ FULL LOAD Burn In Test	
8	VIBRATION TEST	10 ~ 500Hz, 2G 10min./1cycle, 60min. each along X, Y, Z axes	1 Carton & 1 Set (1) Waveform： Sine Wave (2) Frequency：10~500Hz (3) Sweep Time：10min/sweep cycle (4) Acceleration：3G (5) Test Time：180min in each axis (X.Y.Z) (6) Ta：25℃	
9	CAPACITOR LIFE CYCLE	SUPPOSE C07 IS THE MOST CRITICAL COMPONENT (1) I/P： 230VAC O/P：FULL LOAD Ta= 25℃ LIFE TIME (2) I/P： 230VAC O/P：FULL LOAD Ta= 60℃ LIFE TIME (3) I/P： 230VAC O/P：75% LOAD Ta= 60℃ LIFE TIME (4) I/P： 230VAC O/P：50% LOAD Ta= 60℃ LIFE TIME		(1) 866304 HRS (2) 84961 HRS (3) 103519 HRS (4) 133846 HRS
10	MTBF	Conducted by Parts Stress Analysis Prediction 1066.2K hrs min. Telcordia SR-332 (Bellcore) ; 129.1K hrs min. MIL-HDBK-217F (25℃)		
11	Ongoing Reliability Test	I/P：230VAC O/P：FULL LOAD TA=50℃ Demonstration Mean Time Between Failure：50,000 hours		

TEST RESULT	TESTER	REVIEW	APPROVAL
PASS	Hanxr	Liutt	Wangdz

2020.10.1 TAG-QA-009