120W 3"×2" Green Open Frame Power Supply EPP-120S series

User's Manual
Click Me

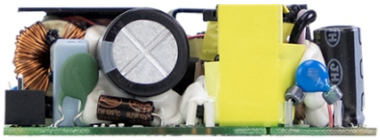

UL62368-1 BS EN/EN62368-1 BS EN/EN60335-1 GB4943.1 IEC62368-1 TPTC004

ECO Automate Industrial Security Network Telecom

Features

- 3"×2" Compact Size
- 120W convection,150W peak (10sec.)
- EMI for both Class Ⅰ & Class Ⅱ configuration
- -30~+85℃ wide range operating temperature
- No load power consumption<0.3W
- High efficiency up to 94%
- Protections: Short circuit / Overload / Over voltage / Over temperature
- Operating altitude up to 5000 meters (Note.5)
- 3 years warranty

Applications

- Industrial automation machinery
- Industrial control system
- Mechanical and electrical equipment
- Electronic instruments, equipments or apparatus

GTIN CODE

MW Search: https://www.meanwell.com/serviceGTIN.aspx

Description

EPP-120S is a 120W highly reliable green PCB type power supply with a high power density on the 3" by 2" footprint. It accepts 80~264VAC input and offers various output voltages between 12V and 48V. The working efficiency is up to 94% and the extremely low no load power consumption is down below 0.3W.EPP-120S is able to be used for both Class Ⅰ (with FG) and ClassⅡ(no FG) system design. EPP-120S has the complete protection functions; it is complied with the international safety regulations such as TUV BS EN/EN62368-1, BS EN/EN60335-1, UL62368-1 and IEC62368-1. EPP-120S series serves as a high price-to-performance power supply solution for various industrial applications.

Model Encoding

EPP-120S-12

- 12 — Output voltage
- 120S — Rated wattage
- EPP — Series name

SPECIFICATION

MODEL			EPP-120S-12	EPP-120S-15	EPP-120S-24	EPP-120S-27	EPP-120S-48
OUTPUT	DC VOLTAGE		12V	15V	24V	27V	48V
	CURRENT	Peak(10 sec.)	11.8A	9.5A	6.25A	5.55A	3.125A
		Convection	9.5A	7.6A	5A	4.44A	2.5A
	RATED POWER	Peak(10 sec.)	141.6W	142.5W	150W	149.8W	150W
		Convection	114W	114W	120W	119.9W	120W
	RIPPLE & NOISE (max.) Note.2		100mVp-p	120mVp-p	150mVp-p	150mVp-p	200mVp-p
	VOLTAGE ADJ. RANGE		11.4~12.6V	14.3~15.8V	22.8~25.2V	25.6 ~ 28.4V	45.6 ~50.4V
	VOLTAGE TOLERANCE Note.3		±2.0%	±2%	±1.0%	±1.0%	±1.0%
	LINE REGULATION		±0.5%	±0.5%	±0.5%	±0.5%	±0.5%
	LOAD REGULATION		±1.0%	±1.0%	±1.0%	±1.0%	±1.0%
	SETUP, RISE TIME		600ms, 30ms/230VAC 600ms, 30ms/115VAC at full load				
	HOLD UP TIME (Typ.)		15ms/230VAC 15ms/115VAC at full load				
INPUT	VOLTAGE RANGE Note.4		80 ~ 264VAC 113 ~ 370VDC				
	FREQUENCY RANGE		47 ~ 63Hz				
	POWER FACTOR		PF>0.94/230VAC PF>0.98/115VAC at full load				
	EFFICIENCY (Typ.)		91%	92%	93%	94%	93.5%
	AC CURRENT (Typ.)		2.3A/115VAC 1.1A/230VAC				
	INRUSH CURRENT (Typ.)		COLD START 30A/115VAC 60A/230VAC				
	LEAKAGE CURRENT		<0.75mA / 240VAC				
PROTECTION	OVERLOAD		130~160% rated output power				
			Protection type : Hiccup mode, recovers automatically after fault condition is removed				
	OVER VOLTAGE		13.2 ~ 15.6V	16.5 ~ 19.5V	26.4 ~ 31.2V	29.7 ~ 35V	52.8 ~ 62.4V
			Protection type : Shut down o/p voltage, re-power on to recover				
	OVER TEMPERATURE		Protection type : Hiccup mode, recovers automatically after temperature goes down				
ENVIRONMENT	WORKING TEMP.		-30 ~ +85℃ (Refer to "Derating Curve")				
	WORKING HUMIDITY		20 ~ 90% RH non-condensing				
	STORAGE TEMP.		-40 ~ +85℃				
	TEMP. COEFFICIENT		±0.03%/℃ (0 ~ 50℃)				
	VIBRATION		10 ~ 500Hz, 2G 10min./1cycle, 60min. each along X, Y, Z axes				
	OPERATING ALTITUDE (Note.5)		5000 meters				
SAFETY & EMC (Note 6)	SAFETY STANDARDS		UL62368-1, TUV BS EN/EN62368-1, BS EN/EN60335-1, IEC62368-1, CCC GB4943.1, EAC TP TC 004 approved				
	WITHSTAND VOLTAGE		I/P-O/P:4KVAC I/P-FG:2KVAC O/P-FG:1.5KVAC				
	ISOLATION RESISTANCE		I/P-O/P, I/P-FG, O/P-FG: 100M Ohms / 500VDC / 25℃/ 70% RH				
	EMC EMISSION		GB9254.1 Class B,GB17625 Class A				
			Parameter	**Standard**	**Test Level / Note**		
			Conducted emission	BS EN/EN55032 (CISPR32)	Class B		
			Radiated emission	BS EN/EN55032 (CISPR32)	Class Ⅰ: Class B , Class Ⅱ: Class A		
			Harmonic current	BS EN/EN61000-3-2	Class A		
			Voltage flicker	BS EN/EN61000-3-3	-----		
	EMC IMMUNITY		BS EN/EN55035, BS EN/EN61000-6-2				
			Parameter	**Standard**	**Test Level / Note**		
			ESD	BS EN/EN61000-4-2	Level 3, 8KV air ; Level 3, 4KV contact		
			RF field susceptibility	BS EN/EN61000-4-3	Level 3, 10V/m(80MHz~2.7GHz) Table 9, 9~28V/m(385MHz~5.78GHz)		
			EFT bursts	BS EN/EN61000-4-4	Level 3, 2KV		
			Surge susceptibility	BS EN/EN61000-4-5	Level 4, 4KV/Line-FG; 2KV/Line-Line		
			Conducted susceptibility	BS EN/EN61000-4-6	Level 3, 10V		
			Magnetic field immunity	BS EN/EN61000-4-8	Level 4, 30A/m		
			Voltage dip, interruption	BS EN/EN61000-4-11	95% dip 0.5 periods, 30% dip 25 periods, 95% interruptions 250 periods		
OTHERS	MTBF		4071.1K hrs min. Telcordia SR-332 (Bellcore) ; 470.2K hrs min. MIL-HDBK-217F (25℃)				
	DIMENSION		76.2*50.8*28mm (L*W*H) or 3" * 2" *1.1" inch				
	PACKING		0.13Kg; 100pcs/14Kg/1.13CUFT				

NOTE

1. All parameters NOT specially mentioned are measured at 230VAC input, rated load and 25 of ambient temperature.
2. Ripple & noise are measured at 20MHz of bandwidth by using a 12" twisted pair-wire terminated with a 0.1 μF & 47 μF parallel capacitor.
3. Tolerance : includes set up tolerance, line regulation and load regulation.
4. Derating may be needed under low input voltages. Please check the derating curve for more details.
5. The ambient temperature derating of 3.5℃/1000m with fanless models and of 5℃/1000m with fan models for operating altitude higher than 2000m(6500ft).
6. The power supply is considered a component which will be installed into a final equipment. All the EMC tests are been executed by mounting the unit on a 360mm*360mm metal plate with 1mm of thickness. The final equipment must be re-confirmed that it still meets EMC directives. For guidance on how to perform these EMC tests, please refer to "EMI testing of component power supplies." (as available on https://www.meanwell.com//Upload/PDF/EMI_statement_en.pdf)

※ Product Liability Disclaimer : For detailed information, please refer to https://www.meanwell.com/serviceDisclaimer.aspx

■ Block Diagram

fosc : 85KHz

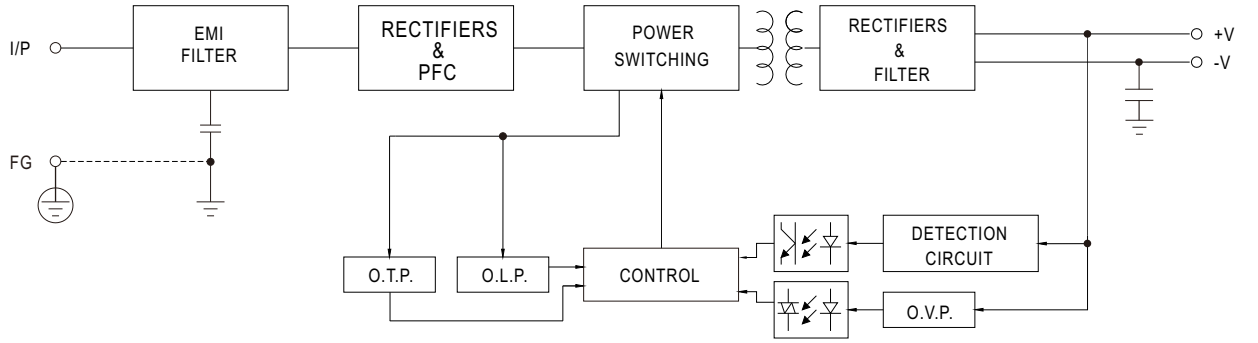

■ Derating Curve

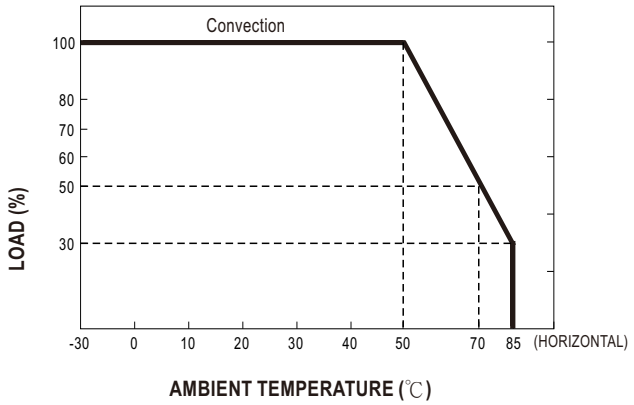

■ Output Derating VS Input Voltage

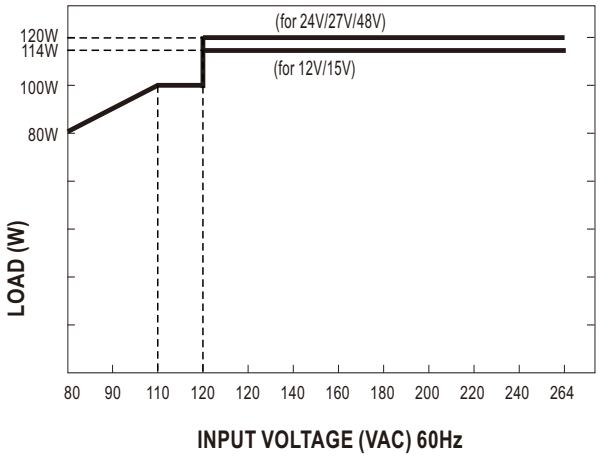

■ Mechanical Specification

(Unit: mm , tolerance ± 1mm)

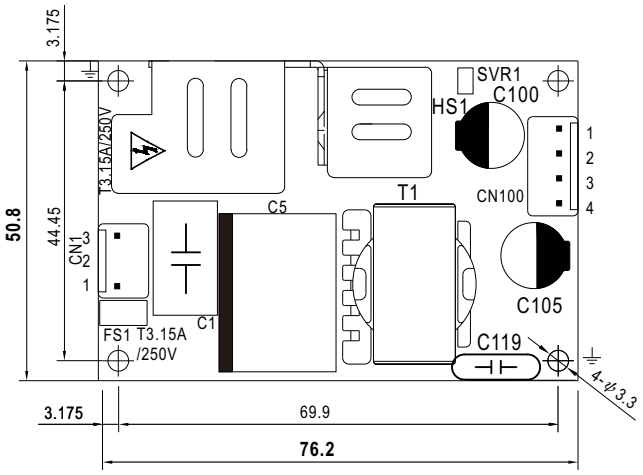

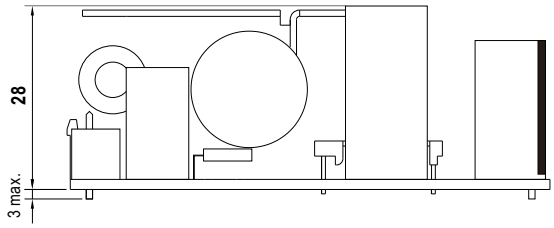

AC Input Connector (CN1) : JST B3P-VH or equivalent

Pin No.	Assignment	Mating Housing	Terminal
1	AC/L	JST VHR or equivalent	JST SVH-21T-P1.1 or equivalent
2	No Pin		
3	AC/N		

DC Output Connector (CN100) : JST B4P-VH or equivalent

Pin No.	Assignment	Mating Housing	Terminal
1,2	+V	JST VHR or equivalent	JST SVH-21T-P1.1 or equivalent
3,4	-V		

⚠ 1.HS1 must have safety isolation distance with system case.

※Note :

1.EPP-120S model delivers EMI Class B for both conducted emission and radiated emission for the power supply, when configured into Class Ⅰ (with FG) system.

2.EPP-120S model delivers EMI Class B conducted emission and Class A radiated emission with King Core K5B RC (12*15*7) in output cable for the power supply when configured into Class Ⅱ (no FG) system.

■ Installation Manual

Please refer to : http://www.meanwell.com/manual.html