# DRS Series

## User Manual

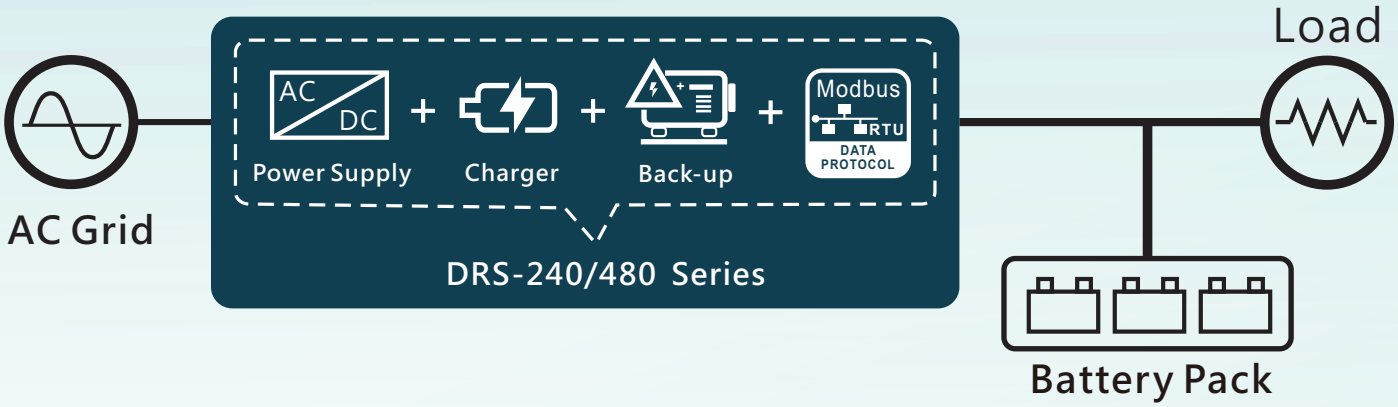


*All-in-one Multi-function Security Power Supply*

The DRS series is a DIN-rail type, digital security power supply launched by MEAN WELL. It integrates DC output, battery charge, uninterruptible power source (DC-UPS) and Modbus digital communication in tiny dimensions, thanks to microelectronics. The DRS series accepts the universal input between 90VAC and 305VAC. In addition to the key protection features, such as overload protection, over voltage protection, battery low voltage, disconnect and battery reverse polarity protection. The DRS series also provides Form-C contacts and LED indicators as alarm signals for AC-fail, battery low, charger circuit fail and DC-OK, allowing easy integration into security systems. This series has 2-stage and 3-stage charge curves selectable by DIP switch, charging curves can also be programmed by SBP-001 as well as manual adjustment through a potentiometer (ADJ) on the panel to change charge current from 20% to 100%. The DRS series is suitable for Lead-acid and Lithium batteries with various capacities and can be remotely monitored by communication. The DRS series is a great solution for smart cities and building securities.

## Content:


**1. Safety Guidelines** 1

**2. Introduction** 2
- 2.1 Model number 2
- 2.2 Features 2
- 2.3 Main specification 3
- 2.4 Safety overview 5
- 2.5 Derating curve 5
- 2.6 Mechanical specification 6

**3. Installation & Wiring** 8
- 3.1 Installation methods 8
- 3.2 Installation procedures 9
- 3.3 Cable selection 9
- 3.4 Battery selection 10
- 3.5 Serial and parallel connection of battery 10

**4. User Interface Panel** 11
- 4.1 Panel description 11
- 4.2 Pin assignment 12
- 4.3 LED indicator 13

**5. Explanation of Setting** 14
- 5.1 DC voltage supply 14
- 5.2 DC-UPS 15
- 5.3 Battery charging 15
- 5.4 Communication Monitoring function 20
- 5.5 Alarm signals 63
- 5.6 Battery start by battery start button 66
- 5.7 Battery start by force button 66
- 5.8 Battery temperature compensation 67
- 5.9 Power boost mode 69
- 5.10 Restore factory default setting 70

**6. Protection and Failure Correction** 71
- 6.1 Protections 71
- 6.2 Failure correction 72

**7. Warranty** 73

**8. Environmental declaration information** 73


2026.03 Ver 6

# 1. Safety Guidelines

- Risk of electrical shock and energy hazard.Allfailure should be examined by a qualified technician.Please do not remove the case of the power supply by yourself.
- Risk of electrical arcs and electric shock(danger to life).Connecting both the primary and the secondary sides together is not allowed.
- Risk of burn hazard.Do not touch the unit in operation and shortly after disconnection.
- Risk of fire and short circuit.The openings should be protected from foreign objects or dripping liquids.
- Only install the unit in a pollution degree 2 environment(Note.1).
- Please do not install the unit in places with high moisture or near the water.
- The FG(⏚)must be connected to PE(Protective Earth).
- Disconnect system from supply voltage:
  Before commencing any isstallation,maintenance or modification work:Disconnect your system from supply voltage.Make sure that inadvertent connection in circuit will be impossible.
- For continued protection against risk of fire,replace only with same type and rating of fuse.
- Notices for battery application
  a. Make sure charging voltage and current meet battery's specification.
  b. Refrain from connecting new and old batteries in series.
  c. The cables between power supply and battery should be kept as short as possible to prevent excessive voltage drop (suggested cable length: 50cm~ 1000cm). Too much voltage drop will lead to longer charging period.
  d. The power supply is suitable for lead-acid batteries (flooded water type, gel colloid type, AGM adsorption glass fibber) or (lithium ion, lithium manganese, lithium ternary...etc.

Note.1: Pollution Degree 2 applies where there is only non-conductive pollution that might temporarily become conductive due to occasional condensation.Generally refer to dry,well-ventilated locations,such as control cabinets.





# 2. Introduction

## 2.1 Model number

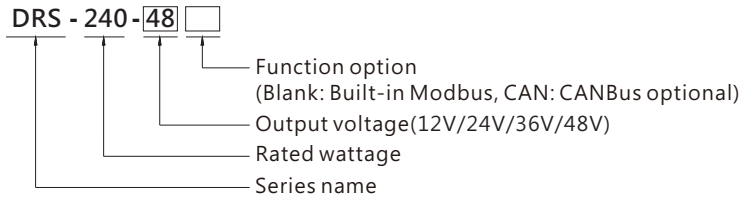


## 2.2 Features

- All-In-One Intelligent Security Power(Power supply,DC-UPS, battery charger and status monitoring)
- Universal input 90~305Vac with PFC (277Vac available)
- Signal and alarms design meet with UL2524,NFPA 1221,BS EN/EN54-4 and GB17945 requirement
- Priority is given to supplying power to the load to ensure that the equipment can operate normally ( remaining power is used to charge the battery )
- Form C relay
- AC fail, DC OK, Low Battery Voltage, Charging fail detection
- Built-in Modbus communication ( Optional CANBus)
- Protection: Short circuit/Over voltage/Over load/Over temperature/Battery reverse polarity ( No damaged ) /Battery under voltage
- Smart programmable charging parameters ( with programmer SBP-001 )
- 20%~100% charging current adjustable by VR
- 2 or 3-stage selectable by DIP S.W.
- Suitable for lead-acid batteries, such as flooded, Gel, AGM, and so on, or lithium-ion batteries, such as lithium ion, lithium manganese, and so on.
- -30~+70℃ wide operating temperature
- LED indicator: status/abnormal indication
- DEKRA/UL/EAC(Pending)/CE/UKCA certified
- 3 years warranty

# 2. 3 Electrical specification

## DRS-240 Series

| MODEL | | | DRS-240-12 | DRS-240-24 | DRS-240-36 | DRS-240-48 |
|---|---|---|---|---|---|---|
| OUTPUT | OUTPUT VOLTAGE Note.2 | | 12V | 24V | 36V | 48V |
| | CURRENT RANGE | | 0 ~ 20A | 0 ~ 10A | 0 ~ 6.6A | 0 ~ 5A |
| | BATTERY CURRENT (CC)(max.) | | 15.4A | 7.7A | 5.1A | 3.85A |
| | RECOMMENDED BATTERY CAPACITY(AMP HOURS)Note.3 | | 20 ~ 200AH | 10 ~ 100AH | 6.6 ~ 66AH | 5 ~ 50AH |
| | TOTAL OUTPUT POWER Note.4 | | Combined power on all Channels must not exceed 240W, load has priority. 275W peak capability within 5s. | | | |
| | RIPPLE & NOISE (max.) Note.5 | | 150mVp-p | 240mVp-p | 360mVp-p | 480mVp-p |
| | VOLTAGE TOLERANCE Note.6 | | ? 1.0% | ? 1.0% | ? 1.0% | ? 1.0% |
| | LINE REGULATION | | ? 0.5% | ? 0.5% | ? 0.5% | ? 0.5% |
| | LOAD REGULATION | | ? 0.5% | ? 0.5% | ? 0.5% | ? 0.5% |
| | SETUP, RISE TIME Note.7 | | 2400ms, 1000ms/230VAC 2400ms, 1000ms/115VAC at full load | | | |
| | HOLD UP TIME (Typ.) | | 16ms/230VAC 10ms/115VAC at full load | | | |
| INPUT | VOLTAGE RANGE | | 90 ~ 305VAC 127 ~ 431VDC | | | |
| | FREQUENCY RANGE | | 47 ~ 63Hz | | | |
| | POWER FACTOR (Typ.) | | PF>0.95/230VAC PF>0.98/115VAC at full load | | | |
| | EFFICIENCY (Typ.) | | 90% | 92% | 92% | 92% |
| | AC CURRENT (Typ.) | | 2.8A/115VAC 1.4A/230VAC | | | |
| | INRUSH CURRENT (Typ.) | | COLD START 30A/115VAC 60A/230VAC | | | |
| PROTECTION | SHORT CIRCUIT | | Protection type: Constant current limiting, power will shutdown after 5 sec, re-power on to recover. | | | |
| | OVERLOAD | | 105 ~ 135% rated output power | | | |
| | | | Protection type: Constant current limiting, shutdown output voltage after 5 sec. | | | |
| | OVER TEMPERATURE | | Automatically drop load with temperature only for bat. load.<br>Protection type : Shut down o/p voltage, recover automatically after temperature goes down. | | | |
| | OVER VOLTAGE | | Load main output : 16.2 ~ 18.6V | Load main output : 32.4 ~ 37.3V | Load main output : 48.6 ~ 55.9V | Load main output : 64.8 ~ 74.5V |
| | | | Protection type : Shut down o/p voltage, re-power on to recover | | | |
| | BATTERY CUT OFF | | 105? 0.3V | 209? 0.5V | 31.3? 0.7V | 41.8? 1V |
| | REVERSE POLARITY | | By internal MOSFET, no damage , recovers automatically after fault condition is removed. | | | |
| FUNCTION | FORM-C RELAY | AC FAIL | Signals AC failure and activates when input voltage drops below : 79~89VAC of 120AC, 132~187VAC of 220VAC.<br>Relay contact output, ON : AC OK ; OFF : AC Fail ; max. rating : 30Vdc/1A | | | |
| | | CHARGER FAIL | Relay contact output, ON : Charger OK ; OFF : Charger Fail ; max. rating : 30Vdc/1A | | | |
| | | DC OK | Signals normal DC output and activates when output voltage > 90% rated value.<br>Relay contact output, ON : DC OK ; OFF : DC Fail ; max. rating : 30Vdc/1A | | | |
| | | BATTERY LOW/ ABNORMAL/ DISCONNECTED | Relay contact output, ON : Battery OK ; OFF : Battery Low ; max. rating : 30Vdc/1A | | | |
| | | | Battery low voltage:< 11? 0.2V | Battery low voltage:< 22? 0.3V | Battery low voltage:< 33? 0.4V | Battery low voltage:< 44? 0.5V |
| | BATTERY START | | Restart system directly from battery and does not require AC power | | | |
| | DC-UPS | | UPS switch to battery power within 10ms of AC failure | | | |
| | ADJUSTABLE CHARGING CURRENT | | 20% ~ 100% charging current adjustable by VR | | | |
| | BATTERY TEMPERATURE COMPENSATION | | The system can change the battery charging voltage by detecting the temperature (Please refer to page 9~10 for more details). | | | |
| ENVIRONMENT | WORKING TEMP. | | -30 ~ +70℃ (Refer to "Derating Curve") | | | |
| | WORKING HUMIDITY | | 20 ~ 90% RH non-condensing | | | |
| | STORAGE TEMP., HUMIDITY | | -40 ~ +85℃, 10 ~ 95% RH non-condensing | | | |
| | TEMP. COEFFICIENT | | ±0.03%/℃ (0 ~ 50℃ ) on Load output | | | |
| | VIBRATION | | 10 ~ 500Hz, 5G 10min./1cycle, 60min. each along X, Y, Z axes | | | |
| | OPERATING ALTITUDE Note.8 | | 2000 meters / OVC Ⅲ | | | |
| | OVER VOLTAGE CATEGORY | | Ⅲ; According to Dekra BS EN/EN62368-1; altitude up to 2000 meters | | | |
| OTHERS | MTBF | | 564.7K hrs min. Telcordia SR-332 (Bellcore); 73.3K hrs min. MIL-HDBK-217F (25℃) | | | |
| | DIMENSION | | 85.5*125.2*129.2mm (W*H*D) | | | |
| | PACKING | | 1.19Kg; 8pcs/ 12.5Kg / 1.08CUFT | | | |



## DRS-480 Series

| MODEL | | | DRS-480-24 | DRS-480-36 | DRS-480-48 |
|---|---|---|---|---|---|
| OUTPUT | OUTPUT VOLTAGE Note.2 | | 24V | 36V | 48V |
| | LOAD CURRENT RANGE | | 0 ~ 20A | 0 ~ 13.3A | 0 ~ 10A |
| | BATTERY CURRENT (CC)(max.) | | 15.4A | 10.2A | 7.7A |
| | RECOMMENDED BATTERY CAPACITY(AMP HOURS)Note.3 | | 20 ~ 200AH | 13 ~ 133AH | 10 ~ 100AH |
| | TOTAL OUTPUT POWER Note.4 | | Combined power on all Channels must not exceed 480W, load has priority. 550W peak capability within 5s. | | |
| | RIPPLE & NOISE (max.) Note.5 | | 240mVp-p | 360mVp-p | 480mVp-p |
| | VOLTAGE TOLERANCE Note.6 | | ? 1.0% | ? 1.0% | ? 1.0% |
| | LINE REGULATION | | ? 0.5% | ? 0.5% | ? 0.5% |
| | LOAD REGULATION | | ? 0.5% | ? 0.5% | ? 0.5% |
| | SETUP RISETIME Note.7 | | 2400ms, 1000ms/230VAC 2400ms, 1000ms/115VAC at full load | | |
| | HOLD UP TIME (Typ.) | | 16ms/230VAC 10ms/115VAC at full load | | |
| INPUT | VOLTAGE RANGE | | 90 ~ 305VAC 127 ~ 431VDC | | |
| | FREQUENCY RANGE | | 47 ~ 63Hz | | |
| | POWER FACTOR (Typ.) | | PF>0.95/230VAC PF>0.98/115VAC at full load | | |
| | EFFICIENCY (Typ.) | | 92.5% | 93.5% | 93.5% |
| | AC CURRENT (Typ.) | | 5.4A/115VAC 2.7A/230VAC | | |
| | INRUSH CURRENT (Typ.) | | COLD START 30A/115VAC 60A/230VAC | | |
| PROTECTION | SHORT CIRCUIT | | Protection type: Constant current limiting, power will shutdown after 5 sec, re-power on to recover. | | |
| | OVERLOAD | | 105 ~ 135% rated output power | | |
| | | | Protection type: Constant current limiting, shutdown output voltage after 5 sec. | | |
| | OVER TEMPERATURE | | Automatically drop load with temperature only for bat. load.<br>Protection type : Shut down o/p voltage, recover automatically after temperature goes down. | | |
| | OVER VOLTAGE | | Load main output : 32.4 ~ 37.3V | Load main output : 48.6 ~ 55.9V | Load main output : 64.8 ~ 74.5V |
| | | | Protection type : Shut down o/p voltage, re-power on to recover | | |
| | BATTERY CUT OFF | | 20.9? 0.5V | 31.3? 0.7V | 41.8? 1V |
| | REVERSE POLARITY | | By internal MOSFET, no damage , recovers automatically after fault condition is removed. | | |
| FUNCTION | FORM-C RELAY | AC FAIL | Signals AC failure and activates when input voltage drops below : 79~89VAC of 120AC, 132~187VAC of 220VAC.<br>Relay contact output, ON : AC OK ; OFF : AC Fail ; max. rating : 30Vdc/1A | | |
| | | CHARGER FAIL | Relay contact output, ON : Charger OK ; OFF : Charger Fail ; max. rating : 30Vdc/1A | | |
| | | DC OK | Signals normal DC output and activates when output voltage > 90% rated value.<br>Relay contact output, ON : DC OK ; OFF : DC Fail ; max. rating : 30Vdc/1A | | |
| | | BATTERY LOW/ ABNORMAL/ DISCONNECTED | Relay contact output, ON : Battery OK ; OFF : Battery Low ; max. rating : 30Vdc/1A | | |
| | | | Battery low voltage : < 22V? 0.3V | Battery low voltage : < 33V? 0.4V | Battery low voltage : < 44V? 0.5V |
| | BATTERY START | | Restart system directly from battery and does not require AC power | | |
| | DC-UPS | | UPS switch to battery power within 10ms of AC failure | | |
| | ADJUSTABLE CHARGING CURRENT | | 20% ~ 100% charging current adjustable by VR | | |
| | BATTERY TEMPERATURE COMPENSATION | | The system can change the battery charging voltage by detecting the temperature (Please refer to page 9~10 for more details). | | |
| ENVIRONMENT | WORKING TEMP. | | -30 ~ +70℃ (Refer to "Derating Curve") | | |
| | WORKING HUMIDITY | | 20 ~ 90% RH non-condensing | | |
| | STORAGE TEMP., HUMIDITY | | -40 ~ +85℃, 10 ~ 95% RH non-condensing | | |
| | TEMP. COEFFICIENT | | ±0.03%/℃ (0 ~ 50℃ ) on Load output | | |
| | VIBRATION | | 10 ~ 500Hz, 5G 10min./1cycle, 60min. each along X, Y, Z axes | | |
| | OPERATING ALTITUDE Note.8 | | 2000 meters / OVC Ⅲ | | |
| | OVER VOLTAGE CATEGORY | | Ⅲ; According to Dekra BS EN/EN62368-1; altitude up to 2000 meters | | |
| OTHERS | MTBF | | 556.6K hrs min. Telcordia SR-332 (Bellcore); 74.5K hrs min. MIL-HDBK-217F (25℃) | | |
| | DIMENSION | | 110*125.2*150.7mm (W*H*D) | | |
| | PACKING | | 1.65Kg; 6pcs/ 11Kg / 1.42CUFT | | |

## 2. 4 Safety Overview

UL62368-1 | BS EN/EN62368-1 | AS/NZS 62368.1 | TPTC004 (Pending) | IEC62368-1

## 2. 5 Derating Curve

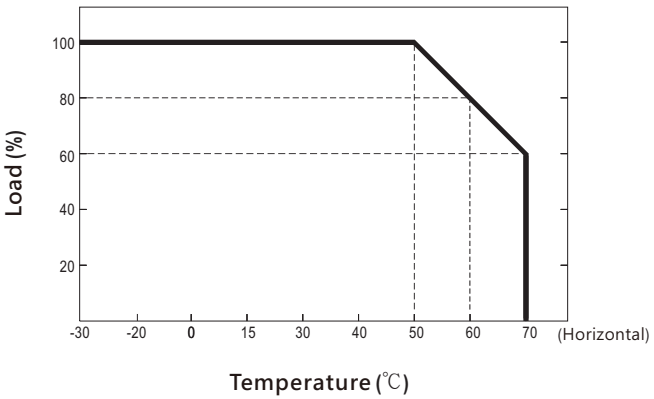




## 2. 6 Mechanical Specification

( DRS-240 Series )

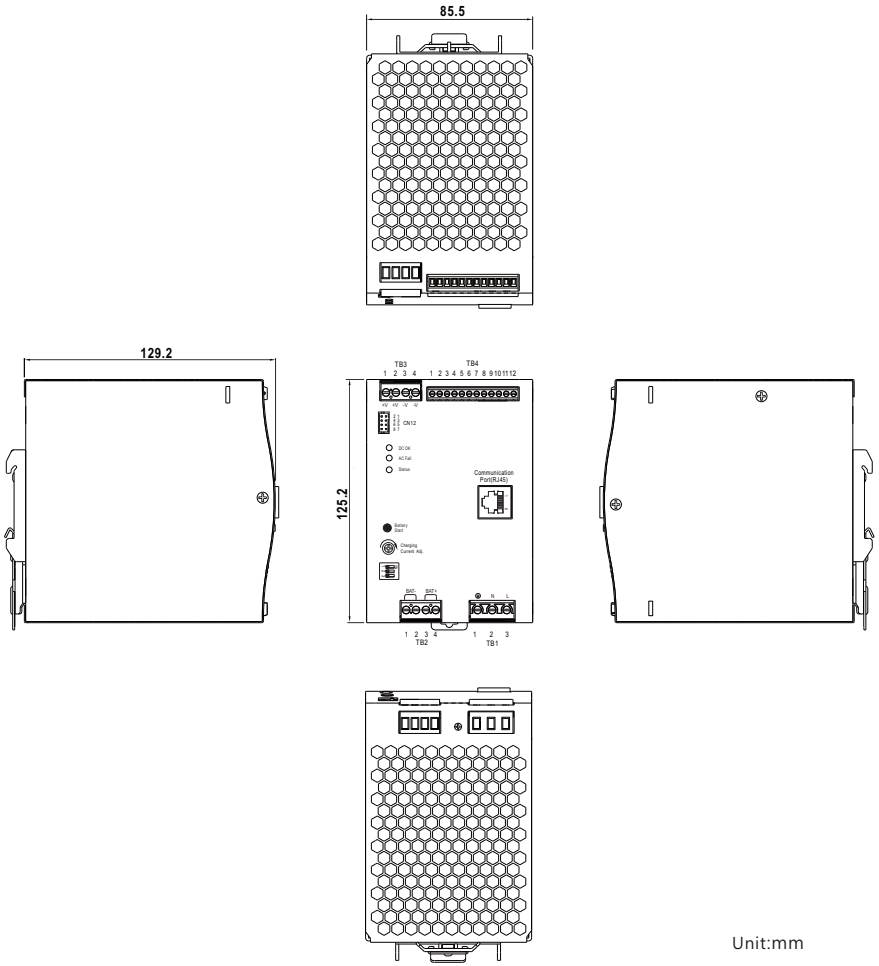


Unit:mm

( DRS-480 Series )

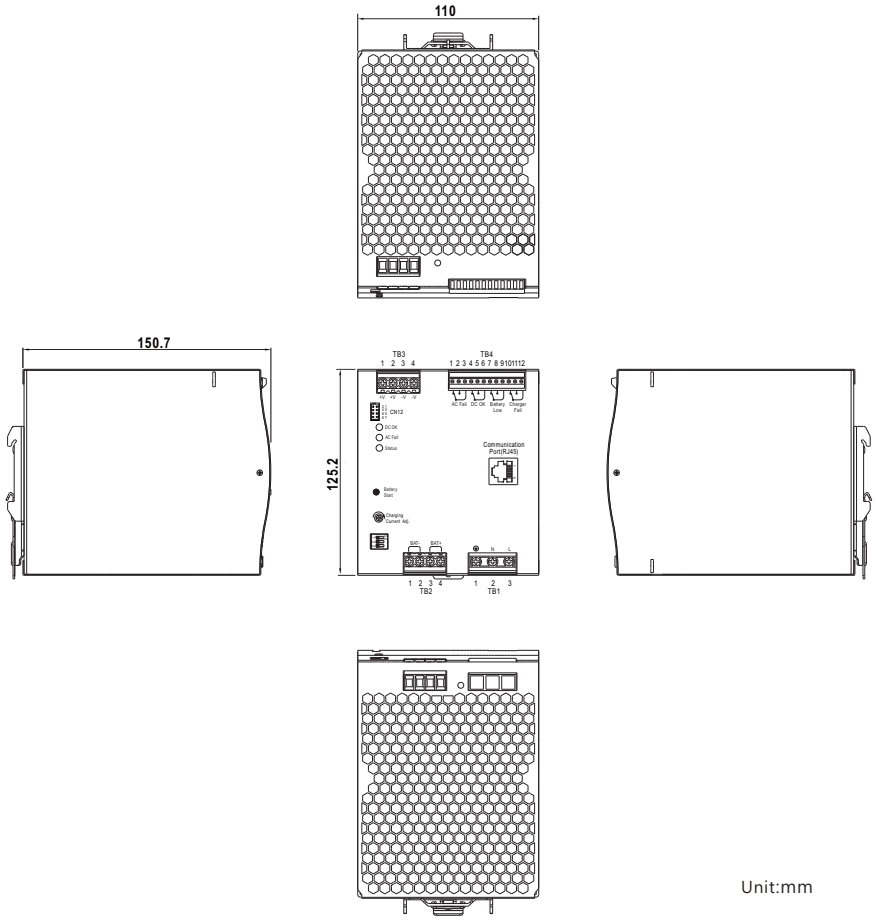


Unit:mm



# 3. Installation & Wiring

## 3.1 Installation methods

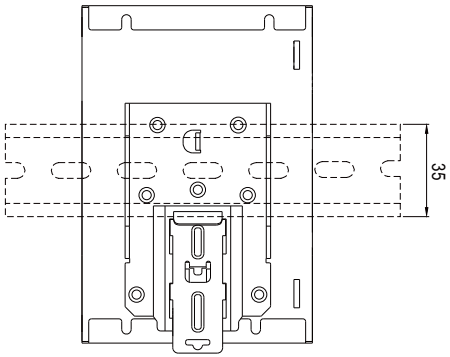


Admissible DIN rail:TS35/7.5或TS35/15
(only for reference, not included in shipment)

① Tilt the unit slightly rearwards
② Fit the unit over top hat rail
③ Slide it downward until it hits the stop
④ Press against the bottom for locking
⑤ Shake the unit slightly to check the locking action

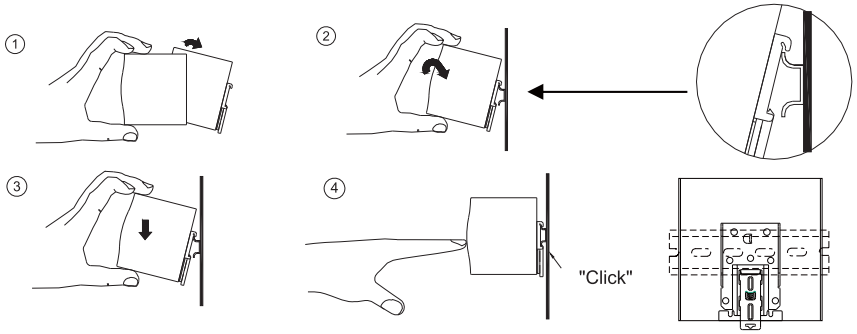

## 3.2 Installation procedures

Step 1. Please connect AC input cables, DC output cables, battery charging cables, and RJ-45 communication cables(if used) to the terminal blocks of this product.

Step 2. Make sure all cables are well connected, then feeds the AC energy to the supply.

Step 3. After power-on, make sure LED indicates in green or orange, meaning normal operation. ( LED status refer to Chapter 4.3 )

## 3.3 Cable selection

Wire connections should be as short as possible. Make sure that suitable wires are chosen based on safety requirement and rating of current. Small cross section will result in lower efficiency, less output power and the wires may also become overheated and cause danger. For selection, please refer to the following table.

| AWG | Cross-section Area ($mm^2$) | Max.Current(A)UL1015(600V 105℃) |
|---|---|---|
| 18 | 0.8 | 6 |
| 16 | 1.3 | 8 |
| 14 | 2.1 | 12 |
| 12 | 3.3 | 22 |
| 10 | 5.3 | 35 |
| 7 | 10 | 46 |
| 6 | 16 | 60 |
| 4 | 25 | 80 |
| 2 | 43 | 110 |

Recommendations for the use of wires



## 3.4 Battery selection

Battery types: Lead acid or lithium ion batteries

Battery capacity: Please refer to the following table

| Models | Battery capacity recommendation | | | |
|---|---|---|---|---|
| | 12V | 24V | 36V | 48V |
| DRS-240 | 20~200AH or above | 10~100AH or above | 6.6~66AH or above | 5~50AH or above |
| DRS-480 | / | 20~200AH or above | 13~133AH or above | 10~100AH or above |

NOTE:

1. Using batteries with greater capacity than recommendation will not damage the battery, but extend charging period is expected.
2. Please contact battery supplier for charging characteristics if it's not clear.

## 3.5 Serial and parallel connection of battery

●Serial connection: When connect 2 batteries in series, it doubled the output voltage, but the capacity remains.

EX: 2pcs of 12V 100AH in series, become a 24V 100AH battery.

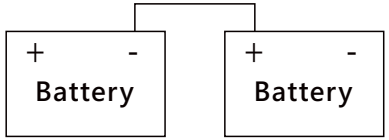


●Parallel connection: When 2 batteries connected in parallel, output voltage remains, but the capacity becomes doubled.

EX: 2pcs of 12V 100AH connect in parallel,become a 12V 200AH battery.

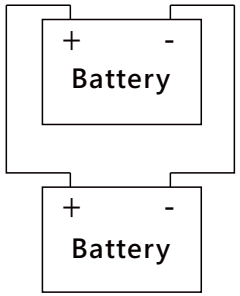

# 4. User Interface Panel

## 4.1 Panel description

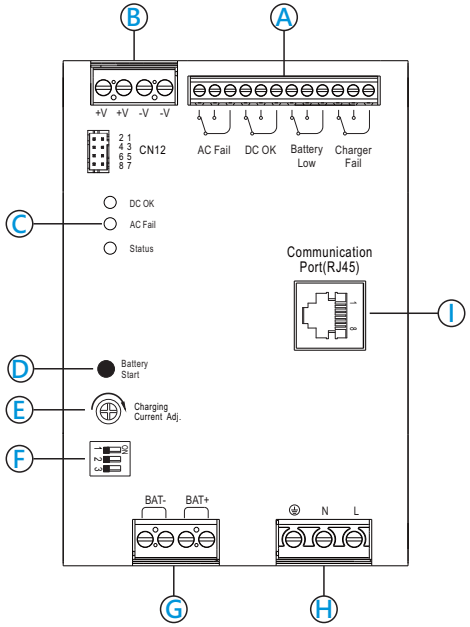


Ⓐ Alarm signal:

It is used for monitoring function. Please refer to chapter 4.2

Ⓑ Terminals of DC output

Ⓒ LED indicators: To show the status of unit.

Ⓓ Battery start button:

Restart system directly from battery and does not require AC power

Ⓔ Io ADJ:

For charging current setting (depend on battery capacity)

Ⓕ Charging curve setting

| | |
|---|---|
| 1 | OFF:3-stage ( default ) , ON:2-stage |
| 2 | Charging curve setting |
| 3 | |

Please refer to chapter 5.3.4.1

Ⓖ Terminals of battery connection

Ⓗ Terminals of AC input

Ⓘ For Modbus communication



Cable selection and suggested torque:

| Terminals / Series | Input ( G ) | | Output ( A ) | | Battery ( F ) | | Control pin ( C ) | |
|---|---|---|---|---|---|---|---|---|
| | Wire | Suggested Torque | Wire | Suggested Torque | Wire | Suggested Torque | Wire | Suggested Torque |
| DRS-240 | 12-26AWG | 5Kgf-cm | 12-24AWG | 5.7Kgf-cm | 12-24AWG | 5.7Kgf-cm | 14-30AWG | 2Kgf-cm |
| DRS-480 | 10-22AWG | 10Kgf-cm | 10-22AWG | 8Kgf-cm | 10-22AWG | 8Kgf-cm | 16-26AWG | 2Kgf-cm |

## 4.2 Pin assignment

PIN definition of CN12: JS-2008R-4*2-T or equivalent

| Pin | Function | Description | Connector |
|---|---|---|---|
| 1 | 3.3V | +3.3V for programmer | 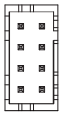  |
| 2 | GND | Reference ground of communication | |
| 3 | RTH+ | NTC connection | |
| 4 | RTH- | | |
| 5 | A0 | Address line(A1), reference to PIN2GND(Signal) | |
| 6 | A1 | Address line(A0), reference to PIN2GND(Signal) | |
| 7,8 | Open: Normal<br>Short: Force | Force start UPS function | |

Terminal Pin No. Assigment (TB4)

| Pin | Function | Description | Terminal |
|---|---|---|---|
| 1,2,3 | AC fail | Refer to chapter 5.5.1 | 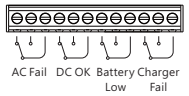  |
| 4,5,6 | DC OK | Refer to chapter 5.5.2 | |
| 7,8,9 | Battery low/<br>Abnormal/<br>Disconnected | Refer to chapter 5.5.3 | |
| 10,11,12 | Charger fail | Refer to chapter 5.5.4 | |

Terminal Pin No. Assigment (RJ-45)

| Pin | Function | Description | Rj45 |
|---|---|---|---|
| 1,2,3,4,5 | NC | No connection | 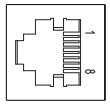 |
| 6 | DB/D- | Modbus mode: Communication via Modbus | |
| | CANH | CANBus mode: Communication via CANBus | |
| 7 | DA/D+ | Modbus mode: Communication via Modbus | |
| | CANL | CANBus mode: Communication via CANBus | |
| 8 | GND-AUX | Reference GND of AUX and is isolated from the output terminal. (+V & -V) | |

## 4.3 LED indicator

| Indicator | | Description | LED indicator |
|---|---|---|---|
| DC OK | | DC fail | OFF |
| | | DC OK | Green |
| AC fail | | AC fail | Red |
| | | AC OK | OFF |
| Status | Charging status | Float | Green |
| | | Charging: CC/CV | Orange |
| | System Diagnostic | Discharging | Orange: 1Blink/Pause |
| | | Charger fail | Red: 1Blink/Pause |
| | | Battery overvoltage/ Battery reverse polarity | Red: 2Blink/Pause |
| | | Battery low/ No battery | Red: 3Blink/Pause |
| | | Battery discharging peak power over timeout | Red: 4Blink/Pause |
| | | Over load/ Short | Red: 5Blink/Pause |
| | | Over temperature | Red: 6Blink/Pause |
| | | Timeout | Red: 7Blink/Pause |





# 5. Explanation of Setting

DRS series integrates multi-functions in tiny dimension, including DC output power, battery charging, DC-UPS and communication monitoring. Alarm signals, AC Fail, DC OK, battery under voltage/disconnection, charger Fail, and 2-stage or 3-stage battery charging, programmable rating of charging current from 20% to 100%, temperature compensation, etc.

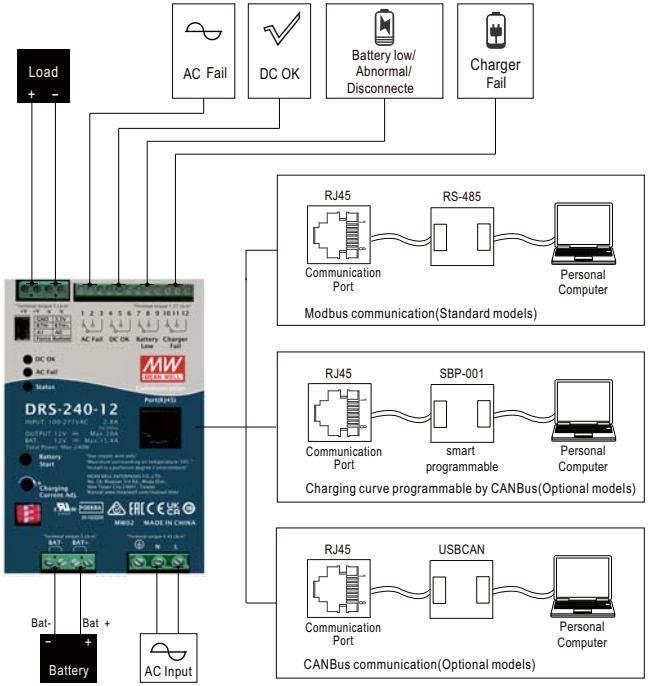


## 5.1 DC voltage supply

When power on, power supply will provide DC voltage to load first and then battery. It automatically reduces charging current to improve system stability.

## 5.2 DC-UPS

5.2.1. When AC mains drops below:79~89VAC of 120VAC, 132~187VAC of 220VAC, UPS function will activate and power source switch battery backup.

**Note: From AC to battery, switch period is within 10ms.**

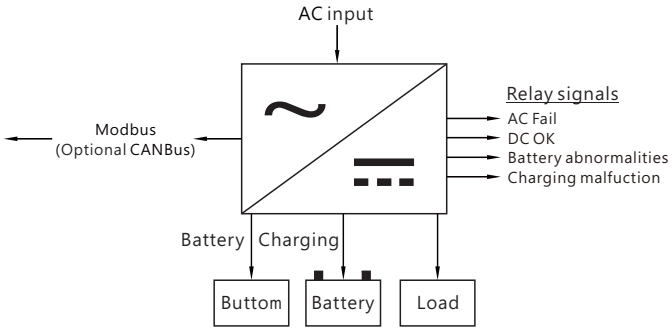


5.2.2. Back-up time

Back-up time depends on : ※ Load current

※ Battery capacity

Example: (C10 discharging)

| Load \ Battery | 10AH | 20AH | 50AH | 100AH | 200AH |
|---|---|---|---|---|---|
| 1.5A | 350min | 13h | 33h | 67h | 133h |
| 3A | 125min | 350min | 17h | 33h | 67h |
| 5A | 60min | 180min | 600min | 20h | 40h |
| 7.5A | 35min | 90min | 350min | 13h | 27h |
| 10A | 23min | 60min | 240min | 10h | 20h |
| 15A | 13min | 35min | 125min | 350min | 13h |

## 5.3 Battery charging

DIP switch on the panel is used for charging curve selection, 2-stage or 3-stage. 2-stage including C.C and C.V is simple fast charging. 3-stage including C.C, C.V and F.V will not turn off after 2-stage of charging finished. Users can choose between 2- or 3-stage according to the demand.

**Note: DC UPS function will not be achieve in 5 seconds at first start-up.**



5.3.1 2-stage charging (DIP switch on "2" stage)

In the initial stage of charging, the charger charges the battery with the maximum current, and the fan is ON (built-in fan model). After a period of time (depending on the battery capacity), the charging current gradually decreases. When the charging current drops to 10% of the rated current, LED indicator lights up in green, indicating that the charging process is complete. If the charging is finished, power supply will turn off the output of charger, but remains the output of load.

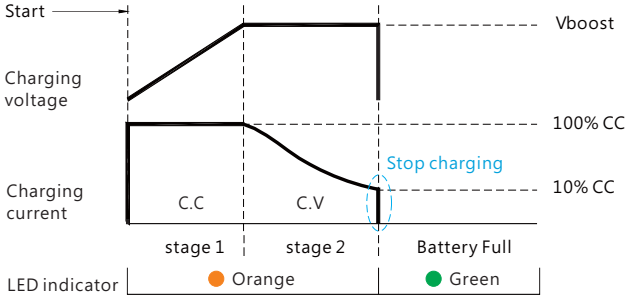


| Status | DRS-240-12 | DRS-240-24 | DRS-240-36 | DRS-240-48 |
|---|---|---|---|---|
| C.C | 15.4A | 7.7A | 5.1A | 3.85A |
| Vboost | 14.4V | 28.8V | 43.2V | 57.6V |

| Status | DRS-480-24 | DRS-480-36 | DRS-480-48 |
|---|---|---|---|
| C.C | 15.4A | 10.2A | 7.7A |
| Vboost | 28.8V | 43.2V | 57.6V |

5.3.2 3-stage charging (DIP switch on "3" stage)

In the initial stage of charging, the charger charges the battery with the maximum current. After a period (depending on the battery capacity), the charging current gradually decreases. When the charging current drops to 10% of the rated current. LED indicator lights up in green, indicating that the charging is complete and the charger remains float charging stage.

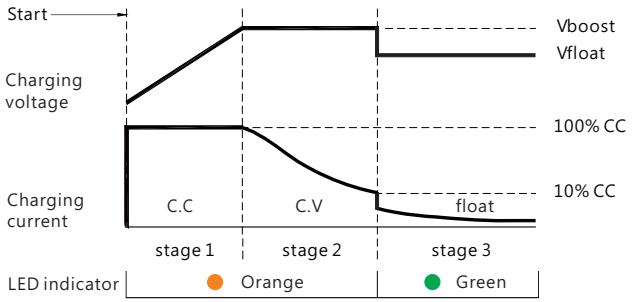


| Status | DRS-240-12 | DRS-240-24 | DRS-240-36 | DRS-240-48 |
|---|---|---|---|---|
| C.C | 15.4A | 7.7A | 5.1A | 3.85A |
| Vboost | 14.4V | 28.8V | 43.2V | 57.6V |
| Vfloat | 13.8V | 27.6V | 41.4V | 55.2V |

| Status | DRS-480-24 | DRS-480-36 | DRS-480-48 |
|---|---|---|---|
| C.C | 15.4A | 10.2A | 7.7A |
| Vboost | 28.8V | 43.2V | 57.6V |
| Vfloat | 27.6V | 41.4V | 55.2V |

### 5.3.3 Charging current adjustment

Charging current can be adjusted by the SVR on the panel from 20% to 100% rated charging current.

### 5.3.4 Charging curve setting

#### 5.3.4.1 Explanation of DIP switch

The charging curve can be adjusted through the DIP switch on the panel.By following the chart below,there are both 2 and 3 stage charging curves that can be chosen accordingly.

| | | |
|---|---|---|
| 1 | OFF:3-stage ( default ) , ON:2-stage | |
| 2 | Refer to the following table | |
| 3 | | |





## Built-in 2-stage charging curves

### DRS-240

| DIP SW | | 12V model | | |
|---|---|---|---|---|
| 2 | 3 | Description | CC(default) | Vboost |
| OFF | OFF | Default, programmable | 15.4A | 14.4 |
| ON | OFF | Pre-defined, Gel battery | | 14.0 |
| OFF | ON | Pre-defined, flooded | | 14.2 |
| ON | ON | Pre-defined, AGM and LiFeO4 | | 14.6 |
| DIP SW | | 24V model | | |
| 2 | 3 | Description | CC(default) | Vboost |
| OFF | OFF | Default, programmable | 7.7A | 28.8 |
| ON | OFF | Pre-defined, Gel battery | | 28.0 |
| OFF | ON | Pre-defined, flooded | | 28.4 |
| ON | ON | Pre-defined, AGM and LiFeO4 | | 29.2 |
| DIP SW | | 36V model | | |
| 2 | 3 | Description | CC(default) | Vboost |
| OFF | OFF | Default, programmable | 5.1A | 43.2 |
| ON | OFF | Pre-defined, Gel battery | | 42 |
| OFF | ON | Pre-defined, flooded | | 42.6 |
| ON | ON | Pre-defined, AGM and LiFeO4 | | 43.8 |
| DIP SW | | 48V model | | |
| 2 | 3 | Description | CC(default) | Vboost |
| OFF | OFF | Default, programmable | 3.85A | 57.6 |
| ON | OFF | Pre-defined, Gel battery | | 56.0 |
| OFF | ON | Pre-defined, flooded | | 56.8 |
| ON | ON | Pre-defined, AGM and LiFeO4 | | 58.4 |

### DRS-480

| DIP SW | | 24V model | | |
|---|---|---|---|---|
| 2 | 3 | Description | CC(default) | Vboost |
| OFF | OFF | Default, programmable | 15.4A | 28.8 |
| ON | OFF | Pre-defined, Gel battery | | 28.0 |
| OFF | ON | Pre-defined, flooded | | 28.4 |
| ON | ON | Pre-defined, AGM and LiFeO4 | | 29.2 |
| DIP SW | | 36V model | | |
| 2 | 3 | Description | CC(default) | Vboost |
| OFF | OFF | Default, programmable | 10.2A | 43.2 |
| ON | OFF | Pre-defined, Gel battery | | 42 |
| OFF | ON | Pre-defined, flooded | | 42.6 |
| ON | ON | Pre-defined, AGM and LiFeO4 | | 43.8 |
| DIP SW | | 48V model | | |
| 2 | 3 | Description | CC(default) | Vboost |
| OFF | OFF | Default, programmable | 7.7A | 57.6 |
| ON | OFF | Pre-defined, Gel battery | | 56.0 |
| OFF | ON | Pre-defined, flooded | | 56.8 |
| ON | ON | Pre-defined, AGM and LiFeO4 | | 58.4 |

NOTE:Voltage tolerance of ±2%

## Built-in 3-stage charging curve

### DRS-240

| DIP SW | | 12V model | | | |
|---|---|---|---|---|---|
| 2 | 3 | Description | CC(default) | Vboost | Vfloat |
| OFF | OFF | Default, programmable | 15.4A | 14.4 | 13.8 |
| ON | OFF | Pre-defined, Gel battery | | 14.0 | 13.6 |
| OFF | ON | Pre-defined, flooded | | 14.2 | 13.4 |
| ON | ON | Pre-defined, AGM and LiFeO4 | | 14.6 | 14.0 |
| DIP SW | | 24V model | | | |
| 2 | 3 | Description | CC(default) | Vboost | Vfloat |
| OFF | OFF | Default, programmable | 7.7A | 28.8 | 27.6 |
| ON | OFF | Pre-defined, Gel battery | | 28.0 | 27.2 |
| OFF | ON | Pre-defined, flooded | | 28.4 | 26.8 |
| ON | ON | Pre-defined, AGM and LiFeO4 | | 29.2 | 28.0 |
| DIP SW | | 36V model | | | |
| 2 | 3 | Description | CC(default) | Vboost | Vfloat |
| OFF | OFF | Default, programmable | 5.1A | 43.2 | 41.4 |
| ON | OFF | Pre-defined, Gel battery | | 42 | 40.8 |
| OFF | ON | Pre-defined, flooded | | 42.6 | 40.2 |
| ON | ON | Pre-defined, AGM and LiFeO4 | | 43.8 | 42.0 |
| DIP SW | | 48V model | | | |
| 2 | 3 | Description | CC(default) | Vboost | Vfloat |
| OFF | OFF | Default, programmable | 3.85A | 57.6 | 55.2 |
| ON | OFF | Pre-defined, Gel battery | | 56.0 | 54.4 |
| OFF | ON | Pre-defined, flooded | | 56.8 | 53.6 |
| ON | ON | Pre-defined, AGM and LiFeO4 | | 58.4 | 56.0 |

### DRS-480

| DIP SW | | 24V model | | | |
|---|---|---|---|---|---|
| 2 | 3 | Description | CC(default) | Vboost | Vfloat |
| OFF | OFF | Default, programmable | 15.4A | 28.8 | 27.6 |
| ON | OFF | Pre-defined, Gel battery | | 28.0 | 27.2 |
| OFF | ON | Pre-defined, flooded | | 28.4 | 26.8 |
| ON | ON | Pre-defined, AGM and LiFeO4 | | 29.2 | 28.0 |
| DIP SW | | 36V model | | | |
| 2 | 3 | Description | CC(default) | Vboost | Vfloat |
| OFF | OFF | Default, programmable | 10.2A | 43.2 | 41.4 |
| ON | OFF | Pre-defined, Gel battery | | 42 | 40.8 |
| OFF | ON | Pre-defined, flooded | | 42.6 | 40.2 |
| ON | ON | Pre-defined, AGM and LiFeO4 | | 43.8 | 42.0 |
| DIP SW | | 48V model | | | |
| 2 | 3 | Description | CC(default) | Vboost | Vfloat |
| OFF | OFF | Default, programmable | 7.7A | 57.6 | 55.2 |
| ON | OFF | Pre-defined, Gel battery | | 56.0 | 54.4 |
| OFF | ON | Pre-defined, flooded | | 56.8 | 53.6 |
| ON | ON | Pre-defined, AGM and LiFeO4 | | 58.4 | 56.0 |

NOTE:Voltage tolerance of ±2%

5.3.4.2 Setting by communication

Users can set charging parameters via Modbus or CANBus(optional) including constant current, voltage, float voltage, tapper current, battery temperature compensation and charge time, etc.
Refer to chapter 5.4 for details.

5.3.4.3 Smart charging curve programming by SBP-001
( only for CANBus models )

SBP- 001 is a smart battery charging programmer developed by MEAN WELL, which can set the charging curves of the DRS series through editing software. SBP-001 provides functions such as charging curve adjustment and battery temperature compensation. Please set the DIP switch pin to Default, programmable (PIN2: OFF: PIN3 : OFF) before use. Configuration and software interface are shown as below. Please refer to "SBP-001 Smart Battery Charging Programmer User Manual" for details.

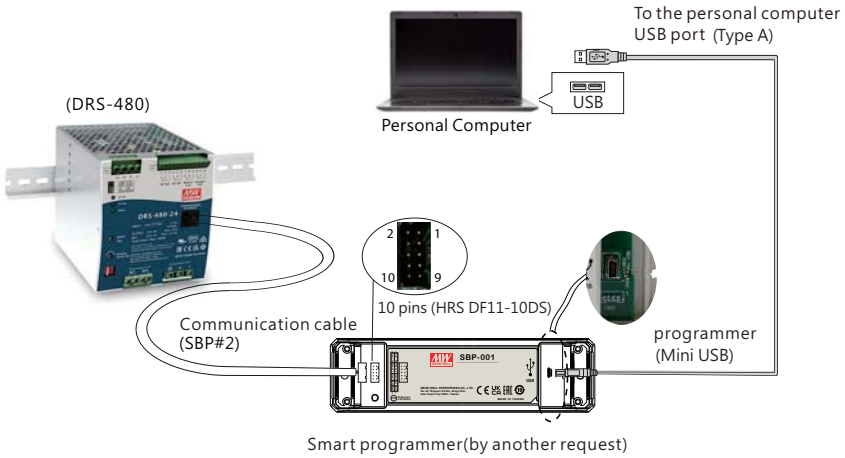

## 5.4 Communication monitoring function

5.4.1 Modbus communication

The Modbus protocol can be used to read status and control settings of the all-in-on security powers (slave), including operation on/off, output voltage/current adjustment and internal temperature reading. In addition, charge curves and relative charge parameters of constant current, constant voltage, float voltage, tapper current, battery temperature compensation and charge time. Output can also be adjusted when set in the charge mode.

5.4.1.1 Modbus specifications

Modbus communication interface

This device supports Modbus RTU with the master-salve principle. During data transfer, please follow the principle of first sending the High byte and then the Low byte except Error Check(CRC-16 checksum).

Physical Layer setting as below:

| Control | Setting |
|---|---|
| Baud Rate | 115200 |
| Data Bits | 8 |
| Stop Bits | 1 |
| Parity | None |
| Flow Control | None |

5.4.1.2 Communication interface

Min. request period (Controller to PSU/CHG): 50mSec。

Max. response time (PSU/CHG to Controller): 12.5mSec。

Min. packet margin time (Controller to PSU/CHG): 12.5mSec。

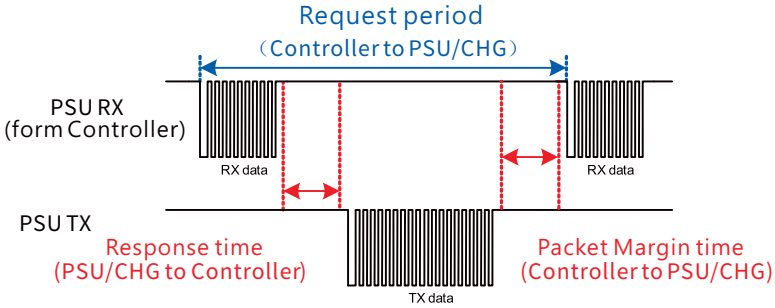


5.4.1.3 Modbus frame encapsulation

Modbus RTU consists of Additional Address, Function Code, Date and Error Check.

| Additional address | Function code | Data | Error check |
|---|---|---|---|
| 1 byte | 1 byte | N bytes | 2 bytes |

Additional address (1byte): defines PSU slave ID

Function code (1byte): The function code is used to tell the slave what kind of action to perform.

Data (N bytes): For data exchange, contents and data length are dependent on different function codes.

Error Check (2bytes): utilizes CRC-16.

5.4.1.4 Additional address definition

Additional address is the slave ID of the device. Each DRS unit should have their unique and own device address to communicate over the bus. Slave ID is set by CN12 (A0~A1)

The device address is set as follows:



| Between A0/A1 and GND ( Single ) | logic |
|---|---|
| Open | 1 |
| Short | 0 |

| Device No. | Device address | |
|---|---|---|
| | A1 | A0 |
| 0 | 0 | 0 |
| 1 | 0 | 1 |
| 2 | 1 | 0 |
| 3 | 1 | 1 |

| Slave ID | Description |
|---|---|
| 0x8X | X means device address |
| 0x00 | Broadcast |

Note:Broadcast is only for command write but not read.

5.4.1.5 Function code description

The main purpose of the function codes is to tell the slave what kind of action to perform. For example, function code 03 will query the slave to read holding registers and respond the master server with their contents.

Function Code of DRS as follow：

| Function Code | | Description |
|---|---|---|
| Read Holding Register | 0x03 | Parameter register read |
| Read Input Register | 0x04 | Analog register reads |
| Preset Single Register | 0x06 | Write to single staging area |

5.4.1.6 Data field and command lists

Data field provides additional information by the slave to complete the action specified by the function code in a request. The data field typically includes register addresses, count values, and written data. There are two forms according to the function codes.

FC=03/04

| Starting Address | Quantity of (Input) Registers |
|---|---|
| 2 Bytes | 2 Bytes |

FC=06

| Register Addressr | Register Value |
|---|---|
| 2 Bytes | 2 Bytes |

The following is data description of register addresses.

| Register address | # of data Bytes | Command Name | Description | Function code | Value | unit |
|---|---|---|---|---|---|---|
| 0x0000 | 2 | OPERATION | Remote ON/OFF control | 0x03、0x06 | 0x00(OFF)/ 0x01(ON) | - |
| 0x0020 | 2 | VOUT_SET | Output voltage set | 0x03、0x06 | Refer to 5.4.4 | V |
| 0x0040 | 2 | FAULT_STATUS | Abnormal status | 0x03 | Refer to transmission data description | - |
| 0x0050 | 2 | READ_VIN | Input voltage read value | 0x04 | Refer to 5.4.4 | V |
| 0x0060 | 2 | READ_VOUT | Output voltage | 0x04 | Refer to 5.4.4 | V |
| 0x0061 | 2 | READ_IOUT | Output current | 0x04 | Refer to 5.4.4 | A |
| 0x0062 | 2 | READ_TEMPERATURE_1 | Internal ambient | 0x04 | Refer to 5.4.4 | ℃ |
| 0x0080~ 0x0082 | 6 | MFR_ID_B0B5 | Manufacture's name | 0x03 | Refer to transmission data description | ASCII |
| 0x0083~ 0x0085 | 6 | MFR_ID_B6B11 | Manufacture's name | 0x03 | Refer to transmission data description | ASCII |
| 0x0086~ 0x0088 | 6 | MFR_MODEL_B0B5 | Manufacture model name | 0x03 | Refer to transmission data description | ASCII |
| 0x0089~ 0x008B | 6 | MFR_MODEL_B6B11 | Manufacture model name | 0x03 | Refer to transmission data description | ASCII |
| 0x008C~ 0x008E | 6 | MFR_REVISION_B0B5 | Firmware version | 0x03 | Refer to transmission data description | Binary |
| 0x008F~ 0x0090 | 4 | MFR_LOCATION_B0B2 | Manufacture place | 0x03、0x06 | TWN/CHN | ASCII |
| 0x0091~ 0x0093 | 6 | MFR_DATE_B0B5 | Manufacture date | 0x03、0x06 | Refer to transmission data description | ASCII |
| 0x0094~ 0x0096 | 6 | MFR_SERIAL_B0B5 | Manufacture serial number | 0x03、0x06 | Refer to transmission data description | ASCII |
| 0x0097~ 0x0099 | 6 | MFR_SERIAL_B6B11 | Manufacture serial number | 0x03、0x06 | Refer to transmission data description | ASCII |
| 0x00B0 | 2 | CURVE_CC | Constant current setting (only for charger) | 0x03、0x06 | Refer to 5.4.4 | A |
| 0x00B1 | 2 | CURVE_CV | Constant voltage setting (only for charger) | 0x03、0x06 | Refer to 5.4.4 | V |
| 0x00B2 | 2 | CURVE_FV | Floating voltage setting (only for charger) | 0x03、0x06 | Refer to 5.4.4 | V |
| 0x00B3 | 2 | CURVE_TC | Taper current setting only for charger) | 0x03、0x06 | Refer to 5.4.4 | A |



| | | | | | | |
|---|---|---|---|---|---|---|
| 0x00B4 | 2 | CURVE_CONFIG | Configuration setting (only for charger) | 0x03、0x06 | Refer to transmission data description | - |
| 0x00B5 | 2 | CURVE_CC_TIMEOUT | CC charge timeout setting (only for charger) | 0x03、0x06 | Refer to 5.4.4 | Min |
| 0x00B6 | 2 | CURVE_CV_TIMEOUT | CV charge timeout setting | 0x03、0x06 | Refer to 5.4.4 | Min |
| 0x00B7 | 2 | CURVE_FV_TIMEOUT | FV charge timeout setting (only for charger) | 0x03、0x06 | Refer to 5.4.4 | Min |
| 0x00B8 | 2 | CHG_STATUS | Charging status reporting (only for charger) | 0x03 | Refer to transmission data description | - |
| 0x00C0~ 0x00C2 | 6 | SCALING_FACTOR | Scaling ratio | 0x03 | Refer to transmission data description | - |
| 0x00C3 | 2 | SYSTEM_STATUS | System status | 0x03 | Refer to transmission data description | - |
| 0x00C4 | 2 | SYSTEM_CONFIG | System configuration | 0x03、0x06 | Refer to transmission data description | - |
| 0x00D0 | 2 | BAT_UVP_SET | BAT_LOW protect setting | 0x03、0x06 | Refer to 5.4.4 | V |
| 0x00D1 | 2 | Force_BAT_UVP_SET | Force BAT_LOW protect setting | 0x03、0x06 | Refer to 5.4.4 | V |
| 0x00D2 | 2 | UPS_CONFIG | UPS config setting | 0x03、0x06 | Refer to transmission data description | - |
| 0x00D3 | 2 | READ_VBAT | Voltage of battery | 0x04 | Refer to 5.4.4 | V |
| 0x00D4 | 2 | READ_IBAT | Charging or discharging current of battery | 0x04 | Refer to 5.4.4 | A |
| 0x00D5 | 2 | READ_BAT_ TEMPERATURE | Temperature of battery | 0x04 | Refer to 5.4.4 | °C |
| 0x00E0 | 2 | AC_Fail_LL_SET | AC fail low line point setting | 0x03、0x06 | Refer to 5.4.4 | V |
| 0x00E1 | 2 | AC_Fail_HL_SET | AC fail high line point setting | 0x03、0x06 | Refer to 5.4.4 | V |
| 0x00E2 | 2 | AC_OK_LL_SET | AC OK low line point setting | 0x03、0x06 | Refer to 5.4.4 | V |
| 0x00E3 | 2 | AC_OK_HL_SET | AC OK high line point setting | 0x03、0x06 | Refer to 5.4.4 | V |
| 0x00E4 | 2 | TIME_BUFFERING | Buffering time setting | 0x03、0x06 | Refer to 5.4.4 | Min |
| 0x00E8 | 2 | UPS_Delay_Time | UPS shutdown delay time setting | 0x03、0x06 | Refer to 5.4.4 | Sec |
| 0x00E9 | 2 | UPS_Shutdown_Time | UPS shutdown time setting | 0x03、0x06 | Refer to 5.4.4 | Sec |

Note: 1.The Time_Buffering setting takes effect only when the bit2 of the low bytes of UPS_CONFIG(0x00D2)=1.
2. The UPS_Delay_Time setting takes effect only when the bit 4 of the low byte of UPS_CONFIG (0x00D2) is 1.
3. The UPS_Shutdown_Time setting takes effect only when the bit 5 of the low byte of UPS_CONFIG (0x00D2) is 1.

Transmission data description:
The conversion of setting and reading values is defined as following:
Actual value= Communication reading value ×F actor (F value).
Among them Factor needs to refer to the definition of SCALING_FACTOR in each model list.
EX: Vo_real(actual DC voltage)= READ_VOUT ×F actor.
If the Factor of READ_VOUT of a certain model is 0.01, the communication reading value is 0x0960(hexadecimal)→2400(decimal),
then Vo_real = 2400 ×0 .01 = 24.00V.

◎ **FAULT_STATUS(0x0040)** :

| | Bit7 | Bit6 | Bit5 | Bit4 | Bit3 | Bit2 | Bit1 | Bit0 |
|---|---|---|---|---|---|---|---|---|
| High byte | Reserved | Reserved | Reserved | Reserved | Reserved | Reserved | Reserved | Reserved |
| Low byte | HI_TEMP | OP_OFF | AC_FAIL | SHORT | OLP | OVP | OTP | FAN_FAIL |

Low byte

Bit 0 FAN_FAIL: Fan abnormal state (Not support)
0 = Normal state
1 = abnormal state

Bit 1 OTP: Over temperature protection
0 = Normal internal temperature
1 = Abnormal internal temperature

Bit 2 OVP: Output over-voltage protection
0 = Normal output voltage
1 = Abnormal output voltage

Bit 3 OLP: Output over current protection
0 = Normal output current
1 = Abnormal output current

Bit 4 SHORT: Short circuit protection
0 = Shorted circuit does not exist
1 = Shorted circuit protected

Bit 5 AC_FAIL: AC abnormal flag
0 = Normal AC range
1 = Abnormal AC range

Bit 6 OP_OFF: DC status
0 = DC turned on
1 = DC turned off



Bit 7 HI_TEMP: High ambient temperature protection
0 = Normal ambient temperature
1 = Abnormal ambient temperature

High byte: Bit 0:7
Reserved: Currently not in use, retain (default is 0)
Note: Unsupported settings displays with "0"

◎ **MFR_ID_B0B5(0x0080-0x0082)** is the first 6 codes of the manufacturer's name ( ASCII) ;
**MFR_ID_B6B11(0x0083-0x0085)** is the last 6 codes of the manufacturer's name ( ASCII)
EX:manufacturer's name is MEANWELL→MFR_ID_B0B5 is MEANWE;
MFR_ID_B6B11 is LL

| MFR_ID_B0B5 | | | | | |
|---|---|---|---|---|---|
| Byte 0 | Byte 1 | Byte 2 | Byte 3 | Byte 4 | Byte 5 |
| 0x4D | 0x45 | 0x41 | 0x4E | 0x57 | 0x45 |

| MFR_ID_B6B11 | | | | | |
|---|---|---|---|---|---|
| Byte 0 | Byte 1 | Byte 2 | Byte 3 | Byte 4 | Byte 5 |
| 0x4C | 0x4C | 0x20 | 0x20 | 0x20 | 0x20 |

◎ **MFR_MODEL_B0B5 (0x0086 – 0x0088)** is the first 6 codes of the manufacturer's model name (ASCII);
**MFR_MODEL_B6B11 (0x0089 – 0x008B)** is the last 6 codes of the manufacturer's model name (ASCII)
EX: Model name is DRS-480-24→MFRMODEL_B0B5 is DRS-48;
MFR_MODEL_B6B11 is 0-24

| MFR_MODEL_B0B5 | | | | | |
|---|---|---|---|---|---|
| Byte 0 | Byte 1 | Byte 2 | Byte 3 | Byte 4 | Byte 5 |
| 0x44 | 0x52 | 0x53 | 0x2D | 0x34 | 0x38 |

| MFR_ID_B6B11 | | | | | |
|---|---|---|---|---|---|
| Byte 6 | Byte 7 | Byte 8 | Byte 9 | Byte 10 | Byte 11 |
| 0x30 | 0x2D | 0x32 | 0x34 | 0x20 | 0x20 |

◎ **MFR_REVISION_B0B5(0x008C-0x008E)** is the firmware version. Arange of hexadecimal 0x00(R00.0)~0xFE(R25.4) represents the firmware version of an MCU; 0xFF represents no MCU existed.

EX1: The power supply has six MCUs. The firmware version of the MCU number 1 is version R01.3(0x0D), the MCU number 2 is version R01.2(0x0C), the MCU number 3 is version R01.1(0x0B), the other MCU numbers are version R01.0(0x0A).

| Byte 0 | Byte 1 | Byte 2 | Byte 3 | Byte 4 | Byte 5 |
|---|---|---|---|---|---|
| 0x0D | 0x0C | 0x0B | 0x0A | 0x0A | 0x0A |

EX2: The power supply has three MCUs. The firmware version of the MCU number 1 is version R25.4(0xFE), the MCU number 2 is version R10.5(0x69), the MCU number 3 is version R01.0(0x0A).

| Byte 0 | Byte 1 | Byte 2 | Byte 3 | Byte 4 | Byte 5 |
|---|---|---|---|---|---|
| 0xFE | 0x69 | 0x0A | 0xFF | 0xFF | 0xFF |

◎ **MFR_DATE_B0B5(0x0091-0x0093)** is manufacture date (ASCII)
EX: MFR_DATE_B0B5 is 180101, meaning 2018/01/01

| Byte 0 | Byte 1 | Byte 2 | Byte 3 | Byte 4 | Byte 5 |
|---|---|---|---|---|---|
| 0x31 | 0x38 | 0x30 | 0x31 | 0x30 | 0x31 |

◎ **MFR_SERIAL_B0B5(0x0094-0x0096)、MFR_SERIAL_B6B11 (0x0097-0x0099)** are defined as manufacture date and manufacture serial number (ASCII)
EX: The first unit manufactured on 2018/01/01→MFR_SERIAL_B0B5: 180101; MER_SERIAL_B6B11: 000001

| Byte 0 | Byte 1 | Byte 2 | Byte 3 | Byte 4 | Byte 5 |
|---|---|---|---|---|---|
| 0x31 | 0x38 | 0x30 | 0x31 | 0x30 | 0x31 |

| Byte 0 | Byte 1 | Byte 2 | Byte 3 | Byte 4 | Byte 5 |
|---|---|---|---|---|---|
| 0x30 | 0x30 | 0x30 | 0x30 | 0x30 | 0x31 |



◎ **CURVE_CONFIG(0x00B4)(only for charger)**：

| | Bit7 | Bit6 | Bit5 | Bit4 | Bit3 | Bit2 | Bit1 | Bit0 |
|---|---|---|---|---|---|---|---|---|
| High byte | Reserved | Reserved | Reserved | Reserved | Reserved | FVTOE | CVTOE | CCTOE |
| Low byte | CUVE | STGS | Reserved | Reserved | TCS | | CUVS | |

Low byte:

Bit 0:1 CUVS: Charge Curve Selection
- 00 = Customized charge curve (default)
- 01 = Gel battery
- 10 = Flooded battery
- 11 = AGM battery

Bit 2:3 TCS: Temperature Compensation Setting
- 00 = disable
- 01 = -3 mV/℃/cell (default)
- 10 = -4 mV/℃/cell
- 11 = -5 mV/℃/cell

Bit 4:5 Reserved: Currently not in use, retain (default is 0)

Bit 6 STGS: 2/3 Stage Charge setting ( Not support )
- 0 = 3 stage charge (default, CURVE_CV and CURVE_FV)
- 1 = 2 stage charge (only CURVE_CV)

Bit 7 CUVE: Charge Curve Function Enable ( defalut is 1, modification is not supported )
- 0 = OFF (VI mode)
- 1 = ON (Curve mode)

High byte:

Bit 0 CCTOE: Constant current stage timeout indication enable
- 0 = OFF (default)
- 1 = ON

Bit 1 CVTOE：Constant voltage stage timeout indication enable
- 0 = OFF (default)
- 1 = ON

Bit 2 FTTOE：Floating voltage stage timeout indication enable
- 0 = OFF (default)
- 1 = ON

Bit 3:7 Reserved: currently not in use, retain (default is 0)

Note: Not support settings display with "0"

◎ **CHG_STATUS(0x00B8)(only for charger)：**

| | Bit7 | Bit6 | Bit5 | Bit4 | Bit3 | Bit2 | Bit1 | Bit0 |
|---|---|---|---|---|---|---|---|---|
| High byte | FVTOF | CVTOF | CCTOF | BUFFTOF | BTNC | NTCER | Reserved | Reserved |
| Low byte | DCM | Reserved | Reserved | Reserved | FVM | CVM | CCM | FULLM |

Low byte:

Bit 0 FULLM: Fully charged mode status
0 = NOT fully charged
1 = Fully charged

Bit 1 CCM: Constant current mode status
0 = The charger NOT in constant current mode
1 = The charger in constant current mode

Bit 2 CVM: Constant voltage mode status
0 = The charger NOT in constant voltage mode
1 = The charger in constant voltage mode

Bit 3 FVM: Float mode status
0 = The charger NOT in float mode
1 = The charger in float mode

Bit 4:6 Reserved: Currently not in use, retain (default is 0)

Bit 7 DCM: Battery discharge mode
0=Charging
1=Discharging

High byte:

Bit 0:1 Reserved: Currently not in use, retain (default is 0)

Bit 2 NTCER: Temperature compensation status
0 = NO short-circuit in the circuitry of temperature compensation
1 = the circuitry of temperature compensation has short-circuited

Bit 3 BTNC: Battery detection
0 = Battery detected
1 = NO battery detected

Bit 4 BUFFTOF: Time out flag of buffering
0 = NO time out in buffering
1 = Buffering time out



Bit 5 CCTOF: Time out flag of constant current mode
0 = NO time out in constant current mode
1 = Constant current mode time out

Bit 6 CVTOF：Time out flag of constant voltage mode
0 = NO time out in constant voltage mode
1 = Constant voltage mode time out

Bit 7 FVTOF: Time out flag of float mode
0 = NO time out in float mode
1 = Float mode time out

Note: Not support settings display with “0”

2 Stage Charge

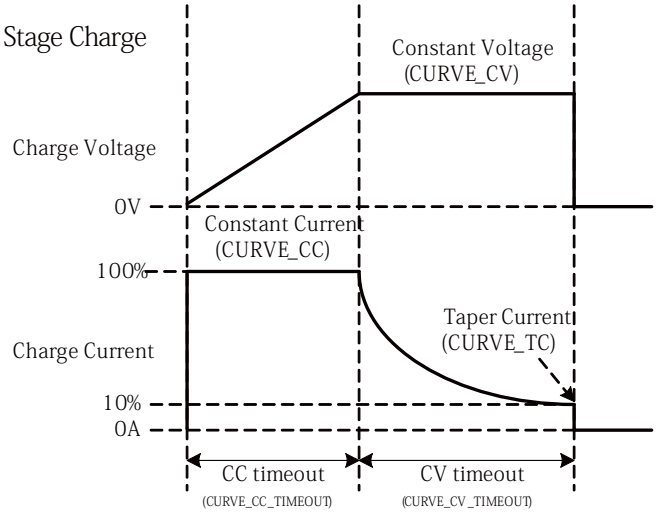


3 Stage Charge

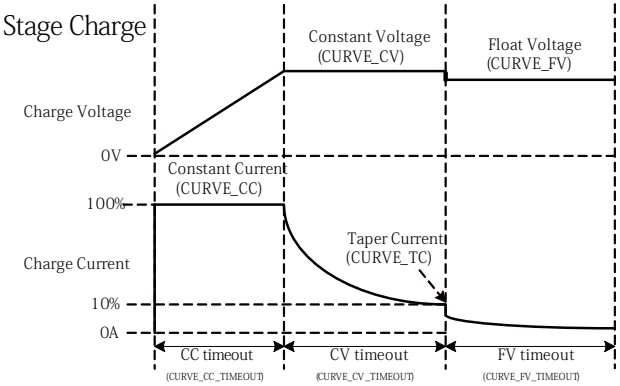

◎ SCALING_FACTOR(0x00C0-0x00C2) :

| | Bit7 | Bit6 | Bit5 | Bit4 | Bit3 | Bit2 | Bit1 | Bit0 |
|---|---|---|---|---|---|---|---|---|
| Byte5 | Reserved | | | | Reserved | | | |
| | Bit7 | Bit6 | Bit5 | Bit4 | Bit3 | Bit2 | Bit1 | Bit0 |
| Byte4 | Reserved | | | | Reserved | | | |
| | Bit7 | Bit6 | Bit5 | Bit4 | Bit3 | Bit2 | Bit1 | Bit0 |
| Byte3 | Reserved | | | | IIN Factor | | | |
| | Bit7 | Bit6 | Bit5 | Bit4 | Bit3 | Bit2 | Bit1 | Bit0 |
| Byte2 | CURVE_TIMEOUT Factor | | | | TEMPERATURE_1 Factor | | | |
| | Bit7 | Bit6 | Bit5 | Bit4 | Bit3 | Bit2 | Bit1 | Bit0 |
| Byte1 | FAN_SPEED Factor | | | | VIN Factor | | | |
| | Bit7 | Bit6 | Bit5 | Bit4 | Bit3 | Bit2 | Bit1 | Bit0 |
| Byte0 | IOUT Factor | | | | VOUT Factor | | | |

Byte0:

Bit 0:3 VOUT Factor：The factor of output voltage

0x0=Not support output voltage relevant commands
0x1~0x3=Currently not in use, retain (default is 0)
0x4=0.001
0x5=0.01
0x6=0.1
0x7=1.0
0x8=10
0x9=100
0xA~0xF= Reserved

Bit 4:7 IOUT Factor：The factor of DC current

0x0=Not support output current relevant commands
0x1~0x3=Currently not in use, retain (default is 0)
0x4=0.001
0x5=0.01
0x6=0.1
0x7=1.0
0x8=10
0x9=100
0xA~0xF= Reserved



Byte1:

Bit 0:3 VIN Factor：The factor of AC input voltage

0x0=Not support AC input relevant commands
0x1~0x3=Currently not in use, retain (default is 0)
0x4=0.001
0x5=0.01
0x6=0.1
0x7=1.0
0x8=10
0x9=100
0xA~0xF= Reserved

Bit 4:7 FAN_SPEED Factor：The factor of fan speed

0x0=Not support fan speed relevant commands
0x1~0x3=Currently not in use, retain (default is 0)
0x4=0.001
0x5=0.01
0x6=0.1
0x7=1.0
0x8=10
0x9=100
0xA~0xF= Reserved

Byte2:

Bit 0:3 TEMPERATURE_1 Factor：The factor of internal ambient temperature

0x0=Not support internal ambient temperature relevant commands
0x1~0x3=Currently not in use, retain (default is 0)
0x4=0.001
0x5=0.01
0x6=0.1
0x7=1.0
0x8=10
0x9=100
0xA~0xF= Reserved

Bit 4:7 CURVE_TIMEOUT Factor：The factor of CC/CV/Float timeout
0x0=Not support CURVE_TIMEOUT relevant commands
0x1~0x3=Currently not in use, retain (default is 0)
0x4=0.001
0x5=0.01
0x6=0.1
0x7=1.0
0x8=10
0x9=100
0xA~0xF= Reserved

Byte3:
Bit 0:3 IIN Factor：The factor of AC input current
0x0=Not support AC input current relevant commands
0x1~0x3=Currently not in use, retain (default is 0)
0x4=0.001
0x5=0.01
0x6=0.1
0x7=1.0
0x8=10
0x9=100
0xA~0xF= Reserved
Bit 4:7 Reserved：Currently not in use, retain (default is 0)

Byte4~Byte5:
Bit 0:7 Reserved：Currently not in use, retain (default is 0)

◎ **SYSTEM_STATUS(0x00C3)：**

| | Bit7 | Bit6 | Bit5 | Bit4 | Bit3 | Bit2 | Bit1 | Bit0 |
|---|---|---|---|---|---|---|---|---|
| High byte | Reserved | Reserved | Reserved | Reserved | Reserved | Reserved | Reserved | Reserved |
| Low byte | CHG/ UPS | EEPER | INITIAL_ STATE | ADL_ON | ORING_ OFF | PFC_OK | DC_OK | M/S |



Low byte:
Bit 0 M/S：Parallel mode（Not support）
0=Slave
1=Master
Bit 1 DC_OK：Secondary DC output voltage status
0=Secondary DD output voltage status TOO LOW
1=Secondary DD output voltage status NORMAL
Bit 2 PFC_OK：Primary side PFC output voltage status（Not support）
0=Primary side PFC no starting or abnormal
1=Primary side PFC normal
Bit 3 ORING_OFF：ORING MOS OFF（Not support）
0=DD start-up, ORING MOS controller ON
1=DD start-up, force control ORING MOS OFF
Bit 4 ADL_ON：Active dummy load control state（Not support）
0=Active dummy load OFF/Not support
1=Active dummy load ON
Bit 5 INITIAL_STATE：Device initialized status
0=In initialization status
1=NOT in initialization status
Bit 6 EEPER：EEPROM data access error
0=Normal EEPROM data access
1=Abnormal EEPROM data access
Bit 7 CHG/UPS：Operation status
0=Charging mode
1=UPS mode

High byte:
Bit 0:7 Reserved：Currently not in use, retain (default is 0)
Note: Not support settings display with "0"

◎ **SYSTEM_CONFIG(0x00C4)：**

| | Bit7 | Bit6 | Bit5 | Bit4 | Bit3 | Bit2 | Bit1 | Bit0 |
|---|---|---|---|---|---|---|---|---|
| High byte | – | – | – | – | – | EEP_OFF | EEP_CONFIG | |
| Low byte | – | – | – | – | – | OPERATION_INIT | | MOD_CTRL |

Low byte:

Bit 0 MOD_CTRL：Modbus control status（Not support）
0 = SVR
1 = Modbus (VOUT_SET, IOUT_SET, OPERATION)

Bit 1:2 OPERATION_INIT：Pre-set value of power on operation command
0b00 = Power OFF, pre-set 0x00(OFF)
0b01 = Power ON, pre-set 0x01(ON)
0b10 = Pre-set is previous set value
0b11 = Reserved, currently not in use

Bit 3:7 Reserved：Currently not in use, retain (default is 0)

High Byte:

Bit 0:1 EEP_CONFIG: EEPROM Configuration
00: Immediate. Changes to parameters are written to EEPROM immediately (factory default)
01: 1 minute delay. Write changes to EEPROM if all parameters remain unchanged for 1 minute
10: 10 minute delay. Write changes to EEPROM if all parameters remain unchanged for 10 minutes
11: Reserved

Bit 2 EEP_OFF: EEPROM storage function ON/OFF
0: Enable. Parameters to be saved into EEPROM (factory default)
1: Disable. Parameters NOT to be saved into EEPROM

Note: Not support settings display with "0"

◎ **UPS_CONFIG(0x00D2)：**

| | Bit7 | Bit6 | Bit5 | Bit4 | Bit3 | Bit2 | Bit1 | Bit0 |
|---|---|---|---|---|---|---|---|---|
| High byte | Reserved | Reserved | Reserved | Reserved | Reserved | Reserved | Reserved | Reserved |
| Low byte | Reserved | Reserved | UPS_Shutdown_EN | UPS_Delay_EN | Wake_Up_EN | Time_Buff_EN | UPS_OFF_EN | Life_Test_EN |



Low byte:

Bit 0 Life_Test_EN：Battery self-test function
0 = OFF
1 = ON(default)

Bit 1 UPS_OFF_EN：Force start state via button to shut down
0 = OFF(default)
1 = ON

Bit 2 Time_Buff_EN：Time_Buffering setting function
0 = OFF(default)
1 = ON

Bit 3 Wake_Up_EN: Wake up the batteries (to activate the lithium batteries)
0 = OFF
1 = On（default）

Bit 4 UPS_Delay_EN: Delay to shut down when in UPS mode
0 = OFF (default)
1 = ON

Bit 5 UPS_Shutdown_EN: Enable to set the restart time when in UPS mode.
0= OFF(default)
1= ON

Bit 6:7 Reserved：Currently not in use, retain (default is 0)

Note:1. The description of time Buffering/UPS_Delay_Time /UPS_Shutdown_ Time

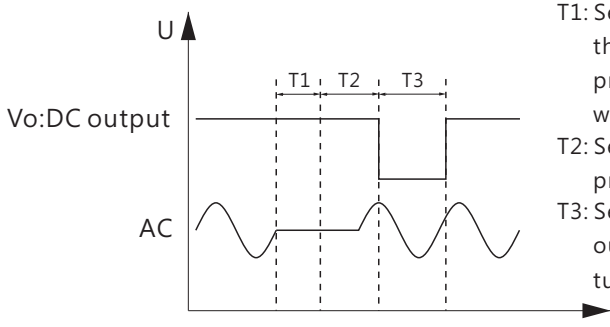


T1: Set the time from the AC off to the Start of the shutdown process (the DRS enters to T2 when the T1 time is finished).
T2: Set the time of the shutdown process.
T3: Set the delay time of from the output is off to the output turns on again.

T1 can be set by the command address 0XE4 (Time Buffering), please refer to chapter 5.4.1.6 for details;
T2 can be set by the command address 0XE8 (UPS_Delay_Time), please refer to chapter 5.4.1.6 for details;
T3 can be set by the command address 0XE9 (UPS_Shutdown_Time), please refer to chapter 5.4.1.6 for details.

Note: 2. The description of Wake_up
When the DRS turns on, it establishes a stable output voltage, which is the rated output voltage.
After 5 secs, the output voltage will drop to 70% rated voltage, then gradually raises to the voltage of the batteries. If no batteries connect, the voltage will raise to 130% rated voltage, then drops to the rated voltage. After this time, the wake_up process ends and the charging begins.
After turning on, the wake_up process is performed every 5 mins.
This command can turn off wake_up process(Wake_Up_EN=0) that occurs every 5 mins, but the one at turnig on the DRS cannot be turned off.

Note: 3. The description of Life_Test
When Vbat≥ the rated output and the charging current ≥5%, the DRS will have a battery test erery 30s · to detect whether the battery is normal or not (default is on). If the DRS detects that the battery is less than the voltage of the limit of to BAT_Low, it's considered an abnormal state,the VBAT will adjust to the rated output voltage.



- **Diagram of the output voltage over time when the batteries are not connected.**

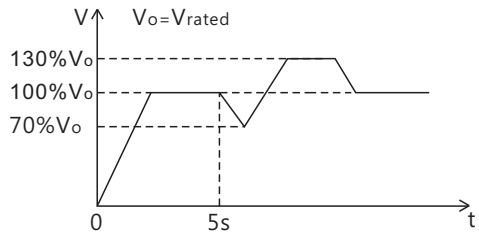


- **Diagram of the output voltage over time when the batteries are connected.**

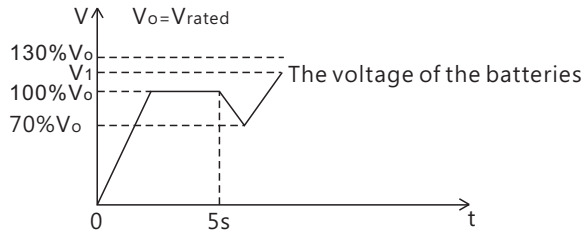


High byte：
Bit 0:7 Reserved：Currently not in use, retain (default is 0)
Note: Not support settings display with "0"

5.4.2 Communication examples

The following provides examples of request and response for each function code of the Modbus RTU.

5.4.2.1 Read holding register（FC=03）

The request message specifies the starting register and quantity of registers to be read.

For example: the master requests the content of analog output holding registers 0x0080~0x0085 (MFR_ID_B0B5, MFR_ID_B6B11) from slave 3.

Request:

| | | | | |
|---|---|---|---|---|
| 0x83 | 0x03 | 0x00 80 | 0x00 06 | 0xDA 02 |

0x83：Slave ID 3
0x03：Function code 3（Read analog output holding R registers）
0x00 80：The data address of the first register requested
0x00 06：The total number of registers requested（Read 6 registers 0x0080~ 0x0085）
0xDA 02：CRC-16 error check. Please be aware that CRC sending the low byte first.

Response：

| | | | | |
|---|---|---|---|---|
| 0x83 | 0x03 | 0x0C | 0x4D 45 41 4E 57 45 4C 4C 20 20 20 20 | 0x4A 8C |

0x83：Slave ID 3
0x03：Function code 3（Read analog output holding R registers）
0x0C：The number of data bytes to follow（12 bytes）
0x4D 45 41 4E 57 45 4C 4C 20 20 20 20：means that the manufacture name of the slave is MEAN WELL
0x4A 8C: CRC-16 error check. Please be aware that CRC sending the Low byte first.

5.4.2.2 Read Input register（FC=04）

The request message specifies the starting register and quantity of registers to be read.

For example: The master requests the content of analog input register 0x0060（READ_VOUT） from slave 3.



Request:

| | | | | |
|---|---|---|---|---|
| 0x83 | 0x04 | 0x00 60 | 0x00 01 | 0x2F F6 |

0x83：Slave ID 3
0x04：Function code 4（Read analog input registers）
0x00 60：The data address of the first register requested
0x00 01：The total number of registers requested（Read only 1 register from 0x0060）
0x2F F6：CRC-16 error check. Please be aware that CRC sending the Low byte first.

Response：

| | | | | |
|---|---|---|---|---|
| 0x83 | 0x04 | 0x02 | 0x15 7C | 0xCE 5F |

0x83：Slave ID 3
0x04：Function code 4（Read analog input register）
0x02：The number of data bytes to follow（2 bytes）
0x15 7C：The contents of register: HEX 0x15 7C = DEC 5500 = 55.00V
0xCE 5F: CRC-16 error check. Please be aware that CRC sending the Low byte first.

5.4.2.3 Write Single register（FC=06）

The request message specifies the register reference to be written.

For example: the master writes PSU ON to analog output holding register of 0x0000 (OPERATION) for slave 3.

Request:

| | | | | |
|---|---|---|---|---|
| 0x83 | 0x06 | 0x00 00 | 0x00 01 | 0x56 28 |

0x83：Slave ID 3
0x06：Function code 6（Pre-set single register）
0x00 00：The data address of the register
0x00 01：The value to write
0x56 28：CRC-16 error check. Please be aware that CRC sending the Low byte first.

Response：

The normal response is an echo of the query, returned after the register contents have been written.

5.4.3 Modbus pratical operation

The following steps will describe how to set the DRS-240-48 to 56V(for DRS-240-48, the output voltage range is 40V~56V)

1. Confirm the address of the DRS-240-48

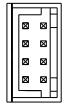


(Refer to chapter 5.4.1.4: Additional Address Definition)

CN12

| Between A0/A1 and GND(Single) | Logic |
|---|---|
| Open | 1 |
| Short | 0 |

| Device No. | Devices | Address |
|---|---|---|
| | A1 | A0 |
| 0 | 0 | 0 |
| 1 | 0 | 1 |
| 2 | 1 | 0 |
| 3 | 1 | 1 |

| Slave ID | Description |
|---|---|
| 0x8X | X means device address |

So the address of the DRS-240-48 is 0x83.

2. Connect the DATA+ / DATA- Pins of the master to the corresponding DA(PIN7) and DB(PIN6) Pins of the RJ45 Connector on the supply. It is recommended to establish a common ground for the communication system to increase its communication reliability by using GND_AUX(PIN8) of RJ45

Physical layer setting as below:

| Control | Setting |
|---|---|
| Baud Rate | 115200 |
| Data Bits | 8 |
| Stop Bit | 1 |
| Parity | None |
| Flow Control | None |

◎ Adding a 120Ω termination resistor to both the controller and the supply's end can increase the communication stability.

◎ If the unit is a terminal,its recommended to connect a termination resistor



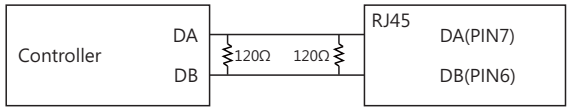


3. Set the output voltage to 56V

| Slave Address | Function Code | The number of data bytes to floolw | Data | CRC |
|---|---|---|---|---|
| 0x83 | 0x03 | 0x01 | 0x15E0 | 0x993A |

0x83: Slave ID83
0x06: Function Code 6(Write Single Register)
0x0020: VOUT_SET register
0x15E0: 56V 1560010x15E0
0x4875: CRC16 Error checking

Note: Conversion factor for VOUT_SET is 0.01 · so $\frac{56V}{0.01}$ =5600

4. It is recommended to review all the settings and parameters using the appropriate. In the event that they do not meet your requirements, you may rewrite them as needed.

EX: Read VOUT_SET to check whether the output voltage was set to a proper VOUT_Set to check whether the output voltage was set to a proper level.

Read VOUT_SET:

| Slave Address | Function Code | Data Address of the first register requested | The total number of requested | CRC |
|---|---|---|---|---|
| 0x83 | 0x03 | 0x0020 | 0x0001 | 0x9BE2 |

| Slave Address | Function Code | The number of data bytes to follow | Data | CRC |
|---|---|---|---|---|
| 0x83 | 0x03 | 0x01 | 0x15E0 | 0x0574 |

Data:0x15E0 → 5600=56V

5. Finally, if there's no output voltage, to check whether tha AC is connected; if hot, you can short the PIN7. PIN8 of CN12 or long press the Battery start button for 3 sec then released, refer to chapter 5.7 for details.

5

### 5.4.4 CANBus communication

- Physical layer

  This protocol complies with CAN ISO-11898, and baud rate is 250Kbps.

- Protocol frame format

  The protocol complies with CAN 2.0B, the extended frame format.

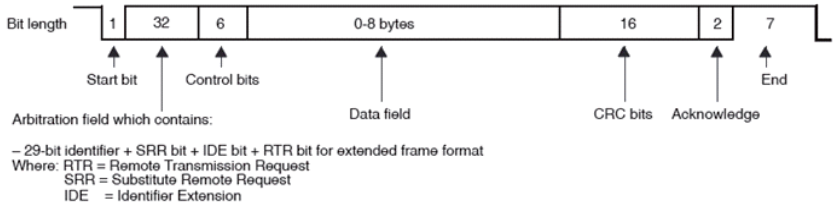


- Communication interface

  Min. request period (Controller to PSU/CHG): 20mSec。

  Max. response time (PSU/CHG to Controller): 5mSec。

  Min. packet margin time (Controller to PSU/CHG): 5mSec。

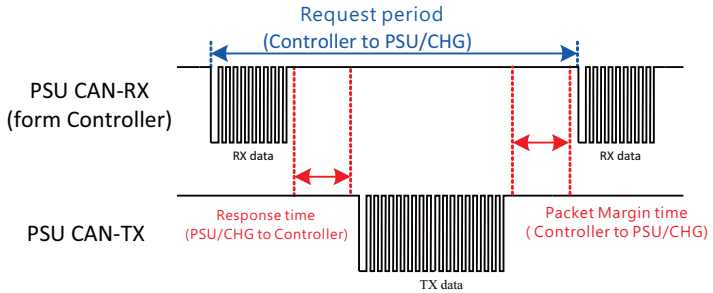


#### 5.4.4.1 Message ID

| Description | Message ID |
|---|---|
| Message ID of DRS | 0x000C00XX |
| Message ID of Master | 0x000C01XX |
| Broadcast | 0x000C01FF |

PS：XX means device address of DRS (depend on A0~A1, from 0x00 to 0x03)



#### 5.4.4.2 CANBus command list

| Command Code | Command Name | Transaction Type | # of data Bytes | Description |
|---|---|---|---|---|
| 0x0000 | OPERATION | R/W | 1 | Remote ON/OFF |
| 0x0020 | VOUT_SET | R/W | 2 | Output voltage set (format: value, F=0.01) |
| 0x0040 | FAULT_STATUS | R | 2 | Abnormal status |
| 0x0050 | READ_VIN | R | 2 | Input voltage read value (format: value, F=0.1) |
| 0x0060 | READ_VOUT | R | 2 | Output voltage (format: value, F=0.01) |
| 0x0061 | READ_IOUT | R | 2 | Output current (format: value, F=0.01) |
| 0x0062 | READ_TEMPERATURE_1 | R | 2 | Internal ambient temperature (format: value, F=0.1) |
| 0x0080 | MFR_ID_B0B5 | R | 6 | Manufacture's name |
| 0x0081 | MFR_ID_B6B11 | R | 6 | Manufacture's name |
| 0x0082 | MFR_MODEL_B0B5 | R | 6 | Manufacture model |
| 0x0083 | MFR_MODEL_B6B11 | R | 6 | Manufacture model |
| 0x0084 | MFR_REVISION_B0B5 | R | 6 | Firmware version |
| 0x0085 | MFR_LOCATION_B0B2 | R/W | 3 | Manufacture place |
| 0x0086 | MFR_DATE_B0B5 | R/W | 6 | Manufacture date |

5

| | | | | |
|---|---|---|---|---|
| 0x0087 | MFR_SERIAL_B0B5 | R/W | 6 | Manufacture serial number |
| 0x0088 | MFR_SERIAL_B6B11 | R/W | 6 | Manufacture serial number |
| 0x00B0 | CURVE_CC | R/W | 2 | Constant current setting (format: value, F=0.01) |
| 0x00B1 | CURVE_CV | R/W | 2 | Constant voltage setting (format: value, F=0.01) |
| 0x00B2 | CURVE_FV | R/W | 2 | Floating voltage setting (format: value, F=0.01) |
| 0x00B3 | CURVE_TC | R/W | 2 | Taper current setting (format: value, F=0.01) |
| 0x00B4 | CURVE_CONFIG | R/W | 2 | Configuration setting |
| 0x00B5 | CURVE_CC_TIMEOUT | R/W | 2 | CC charge timeout setting |
| 0x00B6 | CURVE_CV_TIMEOUT | R/W | 2 | CV charge timeout setting |
| 0x00B7 | CURVE_FV_TIMEOUT | R/W | 2 | FV charge timeout setting |
| 0x00B8 | CHG_STATUS | R | 2 | Charging status reporting (only for charger) |
| 0x00C0 | SCALING_FACTOR | R | 2 | Scaling ratio |
| 0x00C1 | SYSTEM_STATUS | R | 2 | System status |
| 0x00C2 | SYSTEM_CONFIG | R/W | 2 | System configuration |
| 0x00D0 | BAT_UVP_SET | R/W | 2 | BAT_LOW protect setting |
| 0x00D1 | Force_BAT_UVP_SET | R/W | 2 | Force BAT_LOW protect setting |
| 0x00D2 | UPS_CONFIG | R/W | 2 | UPS config setting |
| 0x00D3 | READ_VBAT | R | 2 | Voltage of battery (format: value, F=0.01) |



| | | | | |
|---|---|---|---|---|
| 0x00D4 | READ_IBAT | R | 2 | Charging or discharging current of battery (format: value, F=0.01) |
| 0x00D5 | READ_BAT_TEMPERATURE | R | 2 | Temperature of battery (format: value, F=0.1) |
| 0x00D6 | CHARGE CYCLES | R/W | 2 | Charge cycles (Not support) |
| 0x00D7 | AH CHARGED | R/W | 2 | Battery capacity (Not support) |
| 0x00E0 | AC_Fail_LL_SET | R/W | 2 | AC fail low line point setting |
| 0x00E1 | AC_Fail_HL_SET | R/W | 2 | AC fail high line point setting |
| 0x00E2 | AC_OK_LL_SET | R/W | 2 | AC OK low line point setting |
| 0x00E3 | AC_OK_HL_SET | R/W | 2 | AC OK high line point setting |
| 0x00E4 | TIME_BUFFERING | R/W | 2 | Buffering time setting |
| 0x00E5 | BACKUP | R/W | 2 | Backup power counting (Not support) |
| 0x00E6 | RUN TIME | R/W | 4 | Running time (Not support) |
| 0x00E7 | UPS_Delay_Time | R/W | 2 | UPS shutdown delay time setting |
| 0x00E8 | UPS_Shutdown_Time | R/W | 2 | UPS shutdown time setting |

Note: 1. The conversion of setting and reading values is defined as following:
Actual value= Communication reading value ×F actor (F value).
Among them Factor needs to refer to the definition of SCALING_FACTOR in each model list.
EX: Vo_real(actual DC voltage)= READ_VOUT ×F actor.
If the Factor of READ_VOUT of a certain model is 0.01, the communication reading value is 0x0960(hexadecimal)→2400(decimal), then Vo_real = 2400 ×0 .01 = 24.00V.

1. The Time_Buffering setting takes effect only when the bit2 of the low bytes of UPS_CONFIG(0x00D2)=1
2. The UPS_Delay_Time setting takes effect only when the bit 4 of the low byte of UPS_CONFIG (0x00D2) is 1.
3. The UPS_Shutdown_Time setting takes effect only when the bit 5 of the low byte of UPS_CONFIG (0x00D2) is 1.

◎ **FAULT_STATUS(0x0040)** :

| | Bit7 | Bit6 | Bit5 | Bit4 | Bit3 | Bit2 | Bit1 | Bit0 |
|---|---|---|---|---|---|---|---|---|
| High byte | Reserved | Reserved | Reserved | Reserved | Reserved | Reserved | Reserved | Reserved |
| Lowbyte | HI_TEMP | OP_OFF | AC_FAIL | SHORT | OLP | OVP | OTP | FAN_FAIL |

Low byte:

Bit 0 FAN_FAIL : Fan abnormal state (Not support)
0 = Normal state
1 = Abnormal state

Bit 1 OTP : Over temperature protection
0 = Normal internal temperature
1 = Abnormal internal temperature

Bit 2 OVP : Output over-voltage protection
0 = Normal output voltage
1 = Abnormal output

Bit 3 OLP : Output over current protection
0 = Normal output current
1 = Abnormal output current

Bit 4 SHORT : Short circuit protection
0 = Shorted circuit does not exist
1 = Shorted circuit protected

Bit 5 AC_FAIL : AC abnormal flag
0 = Normal AC range
1 = Abnormal AC range

Bit 6 OP_OFF : DC status
0 = DC turned on
1 = DC turned off

Bit 7 HI_TEMP : High ambient temperature protection
0 = Normal ambient temperature
1 = Abnormal ambient temperature

High byte:

Bit 0:7 Reserved : Currently not in use, retain (default is 0)

Note: Unsupported settings displays with "0"



◎ **MFR_ID_B0B5(0x0080)** is the first 6 codes of the manufacturer's name (ASCII) ;
**MFR_ID_B6B11(0x0081)** is the last 6 codes of the manufacturer's name ( ASCII)

EX: manufacturer's name is MEANWELL→MFR_ID_B0B5 is MEANWE;
MFR_ID_B6B11 is LL

| MFR_ID_B0B5 | | | | | |
|---|---|---|---|---|---|
| Byte 0 | Byte 1 | Byte 2 | Byte 3 | Byte 4 | Byte 5 |
| 0x4D | 0x45 | 0x41 | 0x4E | 0x57 | 0x45 |

| MFR_ID_B6B11 | | | | | |
|---|---|---|---|---|---|
| Byte 0 | Byte 1 | Byte 2 | Byte 3 | Byte 4 | Byte 5 |
| 0x4C | 0x4C | 0x20 | 0x20 | 0x20 | 0x20 |

◎ **MFR_MODEL_B0B5(0x0082)** is the first 6 codes of the manufacturer's model name (ASCII) ;
**MFR_MODEL_B6B11(0x0083)** is the last 6 codes of the manufacturer's model name (ASCII)

EX: Model name is DRS-480-24→MFRMODEL_B0B5 is DRS-48;
MFR_MODEL_B6B11 is 0-24

| MFR_MODEL_B0B5 | | | | | |
|---|---|---|---|---|---|
| Byte 0 | Byte 1 | Byte 2 | Byte 3 | Byte 4 | Byte 5 |
| 0x44 | 0x52 | 0x53 | 0x2D | 0x34 | 0x38 |

| MFR_ID_B6B11 | | | | | |
|---|---|---|---|---|---|
| Byte 6 | Byte 7 | Byte 8 | Byte 9 | Byte 10 | Byte 11 |
| 0x30 | 0x2D | 0x32 | 0x34 | 0x20 | 0x20 |

◎ **MFR_REVISION_B0B5(0x0084)** is the firmware version. Arange of hexadecimal 0x00(R00.0)~0xFE(R25.4) represents the firmware version of an MCU; 0xFF represents no MCU existed.

EX1: The power supply has six MCUs. The firmware version of the MCU number 1 is version R01.3(0x0D), the MCU number 2 is version R01.2(0x0C), the MCU number 3 is version R01.1(0x0B), the other MCU numbers are version R01.0(0x0A)

| Byte 0 | Byte 1 | Byte 2 | Byte 3 | Byte 4 | Byte 5 |
|---|---|---|---|---|---|
| 0x0D | 0x0C | 0x0B | 0x0A | 0x0A | 0x0A |

EX2: The power supply has three MCUs. The firmware version of the MCU number 1 is version R25.4(0xFE), the MCU number 2 is version R10.5(0x69), the MCU number 3 is version R01.0(0x0A).

| Byte 0 | Byte 1 | Byte 2 | Byte 3 | Byte 4 | Byte 5 |
|---|---|---|---|---|---|
| 0xFE | 0x69 | 0x0A | 0xFF | 0xFF | 0xFF |

5

◎ **MFR_DATE_B0B5(0x0086)** is manufacture date (ASCII)
EX: MFR_DATE_B0B5 is 180101, meaning 2018/01/01

| Byte 0 | Byte 1 | Byte 2 | Byte 3 | Byte 4 | Byte 5 |
|---|---|---|---|---|---|
| 0x31 | 0x38 | 0x30 | 0x31 | 0x30 | 0x31 |

◎ **MFR_SERIAL_B0B5(0x0087)、MFR_SERIAL_B6B11(0x0088)** are defined as manufacture date and manufacture serial number (ASCII)
EX: The first unit manufactured on 2018/01/01→MFR_SERIAL_B0B5: 180101; MER_SERIAL_B6B11: 000001

| Byte 0 | Byte 1 | Byte 2 | Byte 3 | Byte 4 | Byte 5 |
|---|---|---|---|---|---|
| 0x31 | 0x38 | 0x30 | 0x31 | 0x30 | 0x31 |

| Byte 0 | Byte 1 | Byte 2 | Byte 3 | Byte 4 | Byte 5 |
|---|---|---|---|---|---|
| 0x30 | 0x30 | 0x30 | 0x30 | 0x30 | 0x31 |

◎ **CURVE_CONFIG(0x00B4)(only for charger)**：

| | | | | | | | | Bit0 |
|---|---|---|---|---|---|---|---|---|
| High byte | Reserved | Reserved | Reserved | Reserved | Reserved | FVTOE | CVTOE | CCTOE |
| Lowbyte | CUVE | STGS | Reserved | Reserved | TCS | | CUVS | |



Low byte:
Bit 0:1 CUVS ：Charge Curve Selection
00 = Customized charge curve (default)
01 = Gel battery
10 = Flooded battery
11 = AGM battery
Bit 2:3 TCS：Temperature Compensation Setting
00 = disable
01 = -3 mV/℃/cell (default)
10 = -4 mV/℃/cell
11 = -5 mV/℃/cell
Bit 4:5 Reserved：Currently not in use, retain (default is 0)
Bit 6 STGS：2/3 Stage Charge setting（Not support）
0 = 3 stage charge (default, CURVE_CV and CURVE_FV)
1 = 2 stage charge (only CURVE_CV)
Bit 7 CUVE：Charge Curve Function Enable（default is 1, modification is not supported）
0 = OFF(VI mode)
1 = ON(Curve mode)

High byte:
Bit 0 CCTOE：Constant current stage timeout indication enable
0 = OFF (default)
1 = ON
Bit 1 CVTOE：Constant voltage stage timeout indication enable
0 = OFF (default)
1 = ON
Bit 2 FTTOE：Floating voltage stage timeout indication enable
0 = OFF (default)
1 = ON
Bit 3:7 Reserved：Currently not in use, retain (default is 0)
Note: Not support settings display with "0"

◎ **CHG_STATUS(0x00B8)(only for charger)**：

| | Bit7 | Bit6 | Bit5 | Bit4 | Bit3 | Bit2 | Bit1 | Bit0 |
|---|---|---|---|---|---|---|---|---|
| High byte | FVTOF | CVTOF | CCTOF | BUFFTOF | BTNC | NTCER | Reserved | Reserved |
| Low byte | DCM | Reserved | Reserved | Reserved | FVM | CVM | CCM | FULLM |

5

Low byte:

Bit 0 FULLM：Fully charged mode status
0 = NOT fully charged
1 = Fully charged

Bit 1 CCM：Constant current mode status
0 = The charger NOT in constant current mode
1 = The charger in constant current mode

Bit 2 CVM：Constant voltage mode status
0 = The charger NOT in constant voltage mode
1 = The charger in constant voltage mode

Bit 3 FVM：Float mode status
0 = The charger NOT in float mode
1 = The charger in float mode

Bit 4:6 Reserved：Currently not in use, retain (default is 0)

Bit 7 DCM：Battery discharge mode
0=Charging
1=Discharging

High byte:

Bit 0:1 Reserved：Currently not in use, retain (default is 0)

Bit 2 NTCER：Temperature compensation status
0 = NO short-circuit in the circuitry of temperature compensation
1 = the circuitry of temperature compensation has short-circuited

Bit 3 BTNC：Battery detection
0 = Battery detected
1 = NO battery detected

Bit 4 BUFFTOF：Time out flag of buffering
0 = NO time out in buffering
1 = Buffering time out

Bit 5 CCTOF：Time out flag of constant current mode
0 = NO time out in constant current mode
1 = Constant current mode time out

Bit 6 CVTOF：Time out flag of constant voltage mode
0 = NO time out in constant voltage mode
1 = Constant voltage mode time out



Bit 7 FVTOF：Time out flag of float mode
0 = NO time out in float mode
1 = Float mode time out

Note: Not support settings display with "0"

Diagram of charging curve:

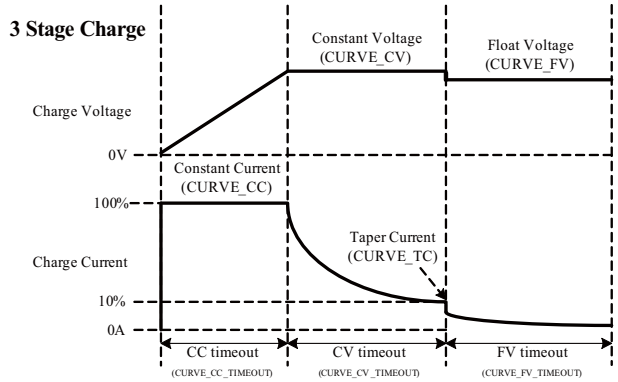


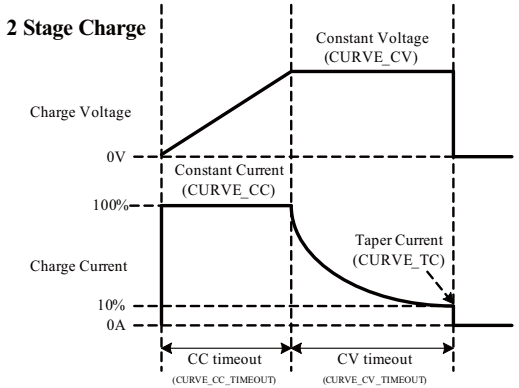


◎ SYSTEM_STATUS(0x00C1)：

| | Bit7 | Bit6 | Bit5 | Bit4 | Bit3 | Bit2 | Bit1 | Bit0 |
|---|---|---|---|---|---|---|---|---|
| High byte | Reserved | Reserved | Reserved | Reserved | Reserved | Reserved | Reserved | Reserved |
| Low byte | CHG/UPS | EEPER | INITIAL_STATE | ADL_ON | ORING_OFF | PFC_OK | DC_OK | M/S |

Low byte:

Bit 0 M/S：Parallel mode（Not support）
0 = Slave
1 = Master

Bit 1 DC_OK：Secondary DC output voltage status
0 = Secondary DD output voltage status TOO LOW
1 = Secondary DD output voltage status NORMAL

Bit 2 PFC_OK：Primary side PFC output voltage status（Not support）
0 = Primary side PFC no starting or abnormal
1 = Primary side PFC normal

Bit 3 ORING_OFF：ORING MOS OFF（Not support）
0 = DD start-up, ORING MOS controller ON
1 = DD start-up, force control ORING MOS OFF

Bit 4 ADL_ON：Active dummy load control state（Not support）
0 = Active dummy load OFF/Not support
1 = Active dummy load ON

Bit 5 INITIAL_STATE：Device initialized status
0 = In initialization status
1 = NOT in initialization status

Bit 6 EEPER：EEPROM data access error
0 = Normal EEPROM data access
1 = Abnormal EEPROM data access

Bit 7 CHG/UPS：Operation status
0 = Charging mode
1 = UPS mode

High byte:

Bit 0:7 Reserved：Currently not in use, retain (default is 0)

Note: Not support settings display with "0"

◎ **SYSTEM_CONFIG(0x00C2)**：

| | Bit7 | Bit6 | Bit5 | Bit4 | Bit3 | Bit2 | Bit1 | Bit0 |
|---|---|---|---|---|---|---|---|---|
| High byte | – | – | – | – | – | EEP_OFF | EEP_CONFIG | |
| Low byte | – | – | – | – | – | OPERATION_INIT | | CAN_CTRL |



Low byte:

Bit 0 CAN_CTRL：CANBus control status（Not support）
0 = SVR
1 = CANBus(VOUT_SET, IOUT_SET, OPERATION)

Bit 1:2 OPERATION_INIT：Pre-set value of power on operation command
0b00 = Power OFF, pre-set 0x00(OFF)
0b01 = Power ON, pre-set 0x01(ON)
0b10 = Pre-set is previous set value
0b11 = Reserved, currently not in use

Bit 3:7 Reserved：Currently not in use, retain (default is 0)

High Byte:

Bit 0:1 EEP_CONFIG: EEPROM Configuration
00: Immediate. Changes to parameters are written to EEPROM immediately (factory default)
01: 1 minute delay. Write changes to EEPROM if all parameters remain unchanged for 1 minute
10: 10 minute delay. Write changes to EEPROM if all parameters remain unchanged for 10 minutes
11: Reserved

Bit 2 EEP_OFF: EEPROM storage function ON/OFF
0: Enable. Parameters to be saved into EEPROM (factory default)
1: Disable. Parameters NOT to be saved into EEPROM

Note: Not support settings display with "0"

◎ **UPS_CONFIG(0x00D2)**：

| | Bit7 | Bit6 | Bit5 | Bit4 | Bit3 | Bit2 | Bit1 | Bit0 |
|---|---|---|---|---|---|---|---|---|
| High byte | Reserved | Reserved | Reserved | Reserved | Reserved | Reserved | Reserved | Reserved |
| Low byte | Reserved | Reserved | UPS_Shutdown_EN | UPS_Delay_EN | Wake_Up_EN | Time_Buff_EN | UPS_OFF_EN | Life_Test_EN |

Low byte:
Bit 0 Life_Test_EN：Battery self-test function
0 = OFF
1 = ON(default)
Bit 1 UPS_OFF_EN：Force start state via button to shut down
0 = OFF(default)
1 = ON
Bit 2 Time_Buff_EN：Time_Buffering setting function
0 = OFF(default)
1 = ON
Bit 3 Wake_Up_EN: Wake up the batteries (to activate the lithium batteries)
0 = OFF
1 = On ( default )
Bit 4 UPS_Delay_EN: Delay to shut down when in UPS mode
0 = OFF (default)
1 = ON
Bit 5 UPS_Shutdown_EN: Enable to set the restart time when in UPS mode.
0=OFF(default)
1=ON
Bit 6:7 Reserved：Currently not in use, retain (default is 0)

Note:1. The description of time Buffering/UPS_Delay_Time /UPS_Shutdown_ Time

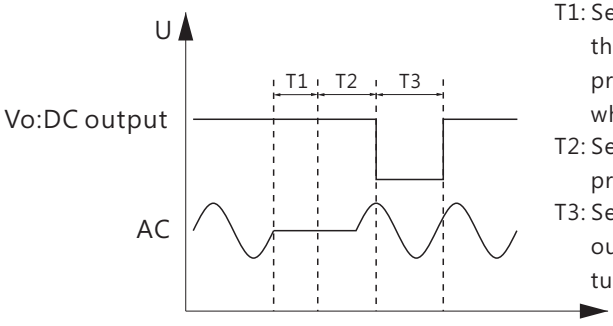


T1: Set the time from the AC off to the Start of the shutdown process (the DRS enters to T2 when the T1 time is finished).
T2: Set the time of the shutdown process.
T3: Set the delay time of from the output is off to the output turns on again.



T1 can be set by the command address 0XE4 (Time Buffering), please refer to chapter 5.4.4 for details;
T2 can be set by the command address 0XE7 (UPS_Delay_Time), please refer to chapter 5.4.4 for details;
T3 can be set by the command address 0XE8 (UPS_Shutdown_Time), please refer to chapter 5.4.4 for details.

Note: 2. The description of Wake_up
When the DRS turns on, it establishes a stable output voltage, which is the rated output voltage.
After 5 secs, the output voltage will drop to 70% rated voltage, then gradually raises to the voltage of the batteries. If no batteries connect, the voltage will raise to 130% rated voltage, then drops to the rated voltage. After this time, the wake_up process ends and the charging begins.
After turning on, the wake_up process is performed every 5 mins.
This command can turn off wake_up process(Wake_Up_EN=0) that occurs every 5 mins, but the one at turnig on the DRS cannot be turned off.

Note: 3. The description of Life_Test
When Vbat⩾ the rated output and the charging current ⩾5%, the DRS will have a battery test erery 30s · to detect whether the battery is normal or not (default is on). If the DRS detects that the battery is less than the voltage of the limit of to BAT_Low, it's considered an abnormal state,the VBAT will adjust to the rated output voltage.

- **Diagram of the output voltage over time when the batteries are not connected.**

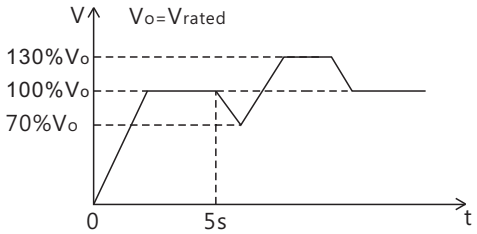


- **Diagram of the output voltage over time when the batteries are connected.**

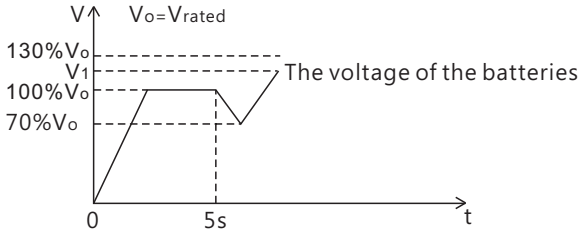


High byte：
Bit 0:7 Reserved：Currently not in use, retain (default is 0)
Note: Not support settings display with "0"



5.4.5 CANBus communication examples

5.4.5.1 Sending command

The master adjusts the output voltage of the unit with the address " 03" to 30V.

| CAN ID | DLC(data length) | Command Code | Parameters |
|---|---|---|---|
| 0xC0103 | 0x04 | 0x2000 | 0xB80B |

Command Code: 0X0020(Vout_Set) →0x0020(Low)+0x00(High)
Parameters: 30V →3000V →0xB8(Low)+0x0B(High)

Note: Conversion factor for VOUT_SET is 0.01 · so $\frac{30V}{0.01}=3000$

5.4.5.2 Reading data or status

The master reads the operation setting from the unit with the address "03" .

| CAN ID | DLC(data length) | Command Code |
|---|---|---|
| 0xC0103 | 0x02 | 0x0000 |

The unit with the address "03" returns the data below:

| CAN ID | DLC(data length) | Command Code | Parameters |
|---|---|---|---|
| 0xC0003 | 0x03 | 0x0000 | 0x01 |

Data:0x01 ON, means that the unit with the address "03" is operating.

5.4.5.3 Practical operation

The following steps will describe how to set the DRS-240-48 to 56V(for DRS-240-48, the output range is 40V~56V)

1. Confirm the address of the DRS-240-48

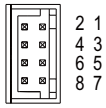


CN12

| Between A0/A1 and GND(Single) | Logic |
|---|---|
| Open | 1 |
| Short | 0 |

| Device No. | Devices | Address |
|---|---|---|
| | A1 | A0 |
| 0 | 0 | 0 |
| 1 | 0 | 1 |
| 2 | 1 | 0 |
| 3 | 1 | 1 |

| Description | Message ID |
|---|---|
| Message ID of DRS | 0x000C00XX |
| Message ID of Master | 0x000C01XX |
| Broadcast | 0x000C01FF |

PS: XX means device address of DRS(depond on A0~A1,from0x00 to 0x03),so the address of the DRS-240-48 is 0xC0103.

2. Connect the CANH/CANL of the master to the corresponding CANH(PIN6) and CANL(PIN7) Pins of the RJ45 connector on the supply.

It is recommended to establish a common ground of the communication system to increase its communication reliability by using GND_AUX(PIN8) of RJ45.

◎ Set baud rate :250kbps,type:extended

◎ Adding a 120Ω termination resistor to both the controller and the supply's end can increase communication stability.

◎ If the unit is a terminal, it is recommended to connect a termination resistor.

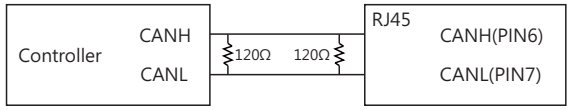




3. Set the output voltage to 56V.

| CAN ID | DLC(data length) | Command Code | Parameters |
|---|---|---|---|
| 0xC0103 | 0x04 | 0x2000 | 0xE015 |

Command code: 0x0020 (Vout_SET)

Data: 56V → 5600 → 0x15E0 → 0xE0(L0)+0x15(Hi)

Note: Conversion factor for VOUT_SET is 0.01 · so $\frac{56V}{0.01}$ =5600

4. It is recommended to review all of the settings and parameters using the appropriate commands. In the event that they do not meet your requirements ,you may rewrite them as needed.

EX: Read VOUT_SET to check whether output voltage was set to a propel level.

Read VOUT_SET:

| CAN ID | DLC(data length) | Command Code |
|---|---|---|
| 0xC0103 | 0x02 | 0x2000 |

The unit returns data below:

| CAN ID | DLC(data length) | Command Code | Parameters |
|---|---|---|---|
| 0xC0003 | 0x04 | 0x2000 | 0xE015 |

Data:0xE0(L0)+0x15(Hi)→0x15E0→5600=56V

5. Finally, if there's no output voltage, to check whether tha AC is connected; if hot, you can short the PIN7. PIN8 of CN12 or long press the Battery start button for 3 sec then released, refer to chapter 5.7 for details.

5

### 5.4.4 Range and tolerance of values

(1) Reading parameters

| | CANBus /Modbus Command | Model | | Range | Tolerance |
|---|---|---|---|---|---|
| 0x0050 | READ_VIN | ALL | | 80 ~305V | ±5V |
| 0x0060 | READ_VOUT | 12V | | 0 ~15V | ±0.12V |
| | | 24V | | 0 ~30V | ±0.24V |
| | | 36V | | 0 ~45V | ±0.36V |
| | | 48V | | 0 ~60V | ±0.48V |
| 0x0061 | READ_IOUT | DRS-240 | 12V | 0 ~20A | ±0.2A |
| | | | 24V | 0 ~10A | ±0.1A |
| | | | 36V | 0 ~6.6A | ±0.066A |
| | | | 48V | 0 ~5A | ±0.05A |
| | | DRS-480 | 24V | 0 ~20A | ±0.2A |
| | | | 36V | 0 ~13.3A | ±0.13A |
| | | | 48V | 0 ~10A | ±0.1A |
| 0x0062 | READ_TEMPERATURE_1 | ALL | | -40 ~ 110°C | ±5°C |
| 0x00D3 | READ_VBAT | 12V | | 0 ~ 15V | ±0.12V |
| | | 24V | | 0 ~ 30V | ±0.24V |
| | | 36V | | 0 ~ 45V | ±0.36V |
| | | 48V | | 0 ~ 60V | ±0.48V |
| 0x00D4 | READ_IBAT | DRS-240 | 12V | -40~20A | ±0.2A |
| | | | 24V | -20~10A | ±0.1A |
| | | | 36V | -13.2~6.6A | ±0.066A |
| | | | 48V | -10~5A | ±0.05A |
| | | DRS-480 | 24V | -40~20A | ±0.2A |
| | | | 36V | -26.6~13.3A | ±0.13A |
| | | | 48V | -40~20A | ±0.1A |
| 0x00D5 | READ_BAT_TEMPERATURE | ALL | | -40 ~ 110°C | ±5°C |

(2) Writing parameters

| 1 | CANBus/ Modbus Command | Model | | Range | Tolerance | Default |
|---|---|---|---|---|---|---|
| 0x0000 | OPERATION | ALL | | 00h(OFF)/01h (ON) | N/A | 01h(ON) |
| 0x0020 | VOUT_SET | 12V | | 10 ~ 14V | ±0.12V | 12V |
| | | 24V | | 20 ~ 28V | ±0.24V | 24V |
| | | 36V | | 30 ~ 42V | ±0.36V | 36V |
| | | 48V | | 40~56V | ±0.48V | 48V |
| 0x00B0 | CURVE_CC | DRS-240 | 12V | 3.08~15.4A | ±0.2A | 15.4A |
| | | | 24V | 1.54~7.7A | ±0.1A | 7.7A |
| | | | 36V | 1.02~5.1A | ±0.066A | 5.1A |
| | | | 48V | 0.77~3.85A | ±0.05A | 3.85A |



| | | | | | | |
|---|---|---|---|---|---|---|
| 0x00B0 | CURVE_CC | DRS-480 | 24V | 3.08~15.4A | ±0.2A | 15.4A |
| | | | 36V | 2.04~10.2A | ±0.13A | 10.2A |
| | | | 48V | 1.54~7.70A | ±0.1A | 7.7A |
| 0x00B1 | CURVE_VBST | 12V | | 9 ~ 15V | ±0.12V | 14.4V |
| | | 24V | | 18 ~ 30V | ±0.24V | 28.8V |
| | | 36V | | 27 ~ 45V | ±0.36V | 43.2V |
| | | 48V | | 36 ~ 60V | ±0.48V | 57.6V |
| 0x00B2 | CURVE_VFLOAT | 12V | | 9V ~ VBST | ±0.12V | 13.8V |
| | | 24V | | 18V ~ VBST | ±0.24V | 27.6V |
| | | 36V | | 27V ~ VBST | ±0.36V | 41.4V |
| | | 48V | | 36V ~ VBST | ±0.48V | 55.2V |
| 0x00B3 | CURVE_ITAPER | DRS-240 | 12V | 0.4 ~ 2A | ±0.2A | 2 A |
| | | | 24V | 0.2 ~ 1A | ±0.1A | 1A |
| | | | 36V | 0.13 ~ 0.66A | ±0.066A | 0.66A |
| | | | 48V | 0.1 ~ 0.5A | ±0.05A | 0.5A |
| | | DRS-480 | 24V | 0.4 ~ 2A | ±0.2A | 2 A |
| | | | 36V | 0.27 ~ 1.33A | ±0.133A | 1.33A |
| | | | 48V | 0.2 ~ 1A | ±0.1A | 1 A |
| 0x00B5 | CURVE_CC_TIME OUT | ALL | | 60 ~ 64800 minute | ±5 minute | 600 minute |
| 0x00B6 | CURVE_CV_TIME OUT | | | | | |
| 0x00B7 | CURVE_FLOAT_TI MEOUT | | | | | |
| 0x00D0 | BAT_UVP_SET | 12V | | 9.6 ~ 12V | ±0.12V | 10.44V |
| | | 24V | | 19.2 ~ 24V | ±0.24V | 20.88V |
| | | 36V | | 28.8 ~ 36V | ±0.36V | 31.32V |
| | | 48V | | 38.4 ~ 48V | ±0.48V | 41.76V |
| 0x00D1 | Force_BAT_UVP_ SET | 12V | | 8.4 ~ 12V | ±0.12V | 8.4V |
| | | 24V | | 16.8 ~ 24V | ±0.24V | 16.8V |
| | | 36V | | 25.2 ~ 36V | ±0.36V | 25.2V |
| | | 48V | | 33.6 ~ 48V | ±0.48V | 33.6V |
| 0x00E0 | AC_Fail_LL_SET | ALL | | 82 ~ 120V | ±5V | 82Vac |
| 0x00E1 | AC_Fail_HL_SET | ALL | | 132 ~ 182V | ±5V | 171.6Vac |
| 0x00E2 | AC_OK_LL_SET | ALL | | 87~125V | ±5V | 87Vac |
| 0x00E3 | AC_OK_HL_SET | ALL | | 137 ~ 187V | ±5V | 182.6Vac |
| 0x00E4 | TIME_BUFFERING | ALL | | 60 ~ 64800 minute | ±5sec | 600 minute |
| ◎ | UPS_Delay_Time | ALL | | 60 ~ 300sec | ±5sec | 60sec |
| | UPS_Shutdown_Time | ALL | | 0~60sec | ±5sec | 15sec |

NOTE:
◎For ModBus , the address of UPS_Delay_ Time is 0x00E8, the address of UPS_Shutdown_Time is 0x00E9;
◎For CANBus , the address of UPS_Delay_ Time is 0x00E7, the address of UPS_Shutdown_Time is 0x00E8.



5

## 5.5 Alarm signals

Alarm signals: AC Fail, DC OK, Battery Low, Abnormality, Disconnection of batteries, and Charger Fail.

| INPUT | AC Fail | | DC OK | | Battery low/Abnormal /Disconnected | | Charger Fail | |
|---|---|---|---|---|---|---|---|---|
| | 2-3 | 1-3 | 5-6 | 4-6 | 8-9 | 7-9 | 11-12 | 10-12 |
| AC only | closed | open | closed | open | open | closed | ----- | ----- |
| AC + BAT. | closed | open | closed | open | closed | open | ----- | ----- |
| BAT. only | open | closed | closed | open | closed | open | ----- | ----- |
| Low BAT. (<30% capacity) | ----- | ----- | ----- | ----- | open | closed | ----- | ----- |
| Charger Fail | ----- | ----- | ----- | ----- | ----- | ----- | open | closed |

1. Relays of " AC fail " ," DC OK" , " Battery low " or " Charger fail "will be triggered according to different abnormal condition.
2. An external voltage source is needed, and maximum voltage is 30Vdc and sinking current is 1A.

AC fail/DC OK/Battery low/Charger fail

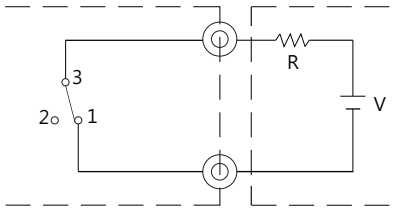


External voltage(V) and resistance(R)
(Maximal sinking current is 1A at 30V)

### 5.5.1 AC fail signal

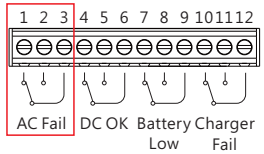


| Status | 2-3 | 1-3 |
|---|---|---|
| Only supply by main power | Short | Open |
| Supply by main power and back-up power (battery) | Short | Open |
| Only supply by back-up power (battery) | Open | Short |



### 5.5.2 DC OK signal

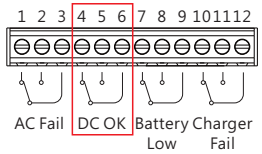


| Status | 5-6 | |
|---|---|---|
| Normal DC output | Short | Open |
| DC fail | Open | Short |

### 5.5.3 Battery Low, reverse polarity, disconnected battery signal

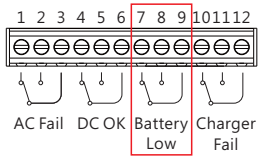


| Status | 8-9 | 7-9 |
|---|---|---|
| Normal battery voltage | Short | Open |
| Low | Open | Short |

### 5.5.4 Charger Fail signal

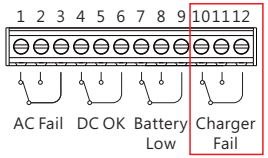


| Status | 11-12 | 10-12 |
|---|---|---|
| Normal charging | Short | Open |
| Abnormal | Open | Short |

Description of the Relay status

| The status of the DRS : | The status of the Charger FAIL relay |
|---|---|
| Charging · the LED is orange | Charger OK |
| Completed 3 stage charging process, enters the floating charge · and the LED is green | Charger OK |
| Completed 2 stage charging process, shuts down the charging loop, the LED is green, and will restart the charging process when the voltage of the battery drops to 80% of Vboost | Charger OK |
| Charging loop anomaly | Charger FAIL |
| UPS mode · the battery is discharging | Charger FAIL |
| BAT_NC(the battery is not connected),shuts down the charging loop. When the battery is detected, it will be charged | Charger FAIL |
| Remote off · shut down | Charger FAIL |

| Protection : | The status of the Charger FAIL relay |
|---|---|
| Charge_Timeout(Charge timeout protection), shuts down the charging loop, no more charging if there is no restart | Charger FAIL |
| 2or3 times peak load · the battery discharges for 4min/4sec | Charger FAIL |
| OLP ( Over load protection ) , Shuts down | Charger FAIL |
| OTP · shuts down | Charger FAIL |
| OVP · shuts down | Charger FAIL |
| Battery reverse protection · shuts down | Charger FAIL |
| The device is damaged, no output, shuts down | Charger FAIL |
| EEPROM ERROR · shuts down | Charger FAIL |
| SCP ( Output short-circuit protection ) , shuts down | Charger FAIL |



## 5.6 Battery start by battery start button

The function of the mode is to restart the system directly from the existed battery or a replaced one and this does not require AC power to activate.

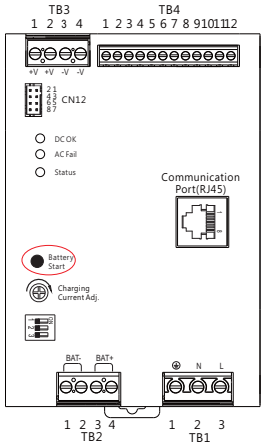


5.6.1 Short press the Battery Start button to connect to the battery to start the mode.

5.6.2 Long pressing the Battery Start button for 3sec can release the connection from the battery to deactivate the mode.

5.6.3 Battery under-voltage protection will be triggered and then disconnecting from the battery when battery voltage drops below a certain value(12V: 10.5±0.3V; 24V:20.9±0.5; 36V:31.3±0.7V; 48V : 41.8±1V)

5.6.4 In the mode, if there is AC power fed in, the supply will switch to using AC energy and then recharge the battery automatically.

## 5.7 Battery start by force button

The function of the mode is to restart the system directly from the existed battery or a replaced one and this does not require AC power to activate.

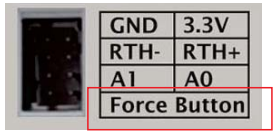

5.7.1 Short-circuit PIN 7 and PIN 8 of CN12 together to activate the mode (after activation, it is recommended to disconnect the connection in order not to interfere in the function of 5.7.2) Short circuit on PIN7 and PIN8 of CN12(Open or remain shorted).

5.7.2 Long pressing the Battery Start button for 3sec can release the connection from the battery to deactivate the mode.

5.7.3 Battery under-voltage protection will be triggered and then disconnecting the battery when battery voltage drops below a certain value ( 12V : 10±0.3V ; 24V : 16.8±0.5 ; 36V : 25.2±0.7V ; 48V : 33.6±1V) )

5.7.4 In the mode, if there is AC power fed in, the supply will switch to using AC energy and then recharge the battery automatically.

## 5.8 Battery temperature compensation

The main function of temperature compensation is to reduce the influences of temperature on battery. Using this function, please put the shipped temperature sensor ( NTC ) on the battery or near it. DRS can work normally without temperature sensor ( NTC ) .

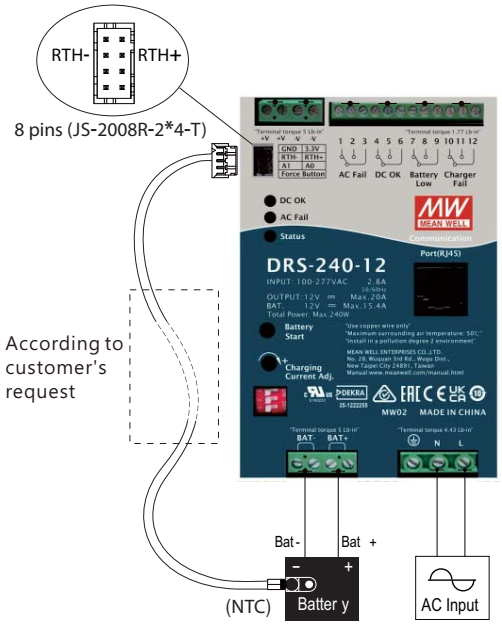




5.8.1. CANBus and Modbus commands can modify parameters of temperature compensation. There are four selections, Disable, -3mV/℃/Cell, -4mV/℃/Cell and -5mV/℃/Cell, and default setting is -3mV/℃/Cell.

5.8.2. No compensation if temperature sensor disconnected. Only Lead-acid batteries can use this compensation.

5.8.3. Temperature range for compensation is 0-40℃. No compensation at middle value 25℃ and temperature <0℃ or >40℃ will be limited at the maximum and minimum boundary.
For 24V model as example, assume $V_{boost}$ is 28.8V, compensation parameter is -5mV/℃/Cell, TEMP_bat is the sensing temperature of NTC, then compensated voltage can be calculated below.

$V_{boost_comp}$=28.8V-5mV*(TEMP_bat -25℃)*12Cell

$V_{boost_H}$=28.8V-5mV*(0℃-25℃)*12Cell=30.3V

$V_{boost_L}$=28.8V-5mV*(40℃-25℃)*12Cell=27.9V

5.8.4 Accessories

※ Standard accessories of DRS: NTC sensor and remote-control cable

| | Item | Amount |
|---|---|---|
| 1 | NTC sensor<br>Part No.: NGS05C250J5<br>50 7<br>UL2468 24x2C<br>NTC(RTH+)<br>NTC(RTH-) | 1 |
| 2 | Remote-control cable<br>50 7<br>UL1007 28AWG<br>JS-2007-2*4-T<br>or equivalent | 1 |

| Conne |
|---|
| To DRS panel<br>According to customer's requiremen<br>To battery<br>Connect |

## 5.9 Power boost mode

5.9.1 No battery connection

Power supply can remain 115% of rated power, then shut down after 5 sec.

5.9.2 With battery connected

The maximum current on the load output is the 2 times the rated current for 4 minutes max.
The maximum current on the load output is the 3 times the rated current for 4 seconds max.
For example (48V model):

◎ When maximum output current draw doubles the rated current, the maximum output period is 4 minutes, and 4 seconds at triple current draw.

Output power

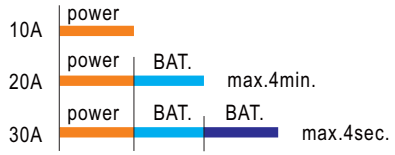


◎ Taking 10 minutes as cycle unit, the period of double power can not exceed 6 minutes or triple less than 6 seconds – otherwise DRS will automatically shut down for protection.

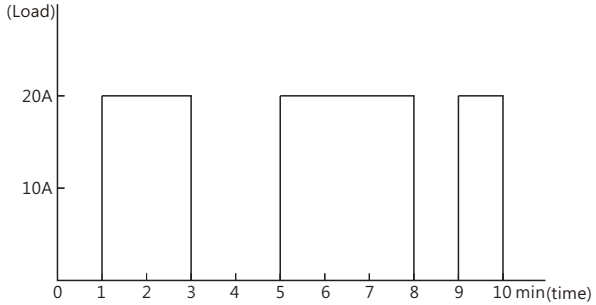


Do not exceed 6 minutes in 10 minute cycle.



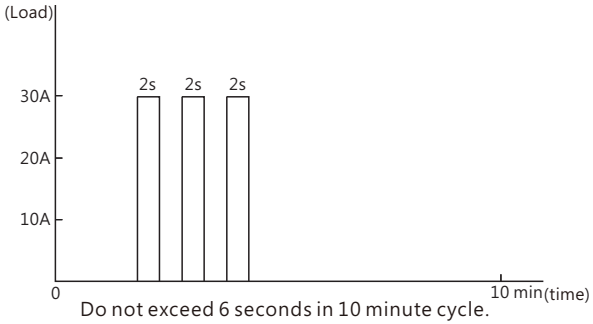


Do not exceed 6 seconds in 10 minute cycle.

## 5.10 Restore factory default setting

Users can restore these parameters in parentheses (0x0020, 0x0020, 0x0030, 0x00B0~0x00B7, 0x00C2, 0x00E0~0x00E4) to factory setting by using the following the steps below:

(1) After supplying AC input power AC, shortly push Bat_start button 5 times in 15 seconds.
(2) LED indicator (Status indicator) will flash 3 times in green and that means the setting is succeeded.
(3) Recycle the supply to restore factory default setting.
(4) If the parameter storage function was disabled (high byte bit 2 EEP_OFF of SYSTEMS (0x00C2) is set to "logic 1"), please perform steps 1 to 3 again to fully restore the parameters to the factory settings.

# 6. Protection and Failure Correction

## 6.1 Protections

6.1.1 Over load protection

When output current reaches the protection criteria, power supply will limit its output as constant current, and shut down for protection after 5 seconds. Re-power on to recover.

6.1.2 Over temperature protection

When the internal temperature of power supply is too high, power supply will shut down for protection and it will turn on automatically if the temperature is back to normal range.

In charging mode, when the internal temperature of power supply is too high, power supply will automatically decrease output power according to the derating curve, chapter 2.5. If the temperature is still too high over limitation, power supply will shut down and recover once the temperature cool down.

6.1.3 Output over voltage protection

When output voltage over specification, over voltage protection will be activated, and power supply shuts down. When the faulty condition removed, re-power on to remove the protection.

6.1.4 Battery under voltage protection

When the voltage of battery is too low, power supply will shut down.

| Model | Protection limitation |
|---|---|
| 12V | 10.5 ±0.3V |
| 24V | 20.9 ±0.5V |
| 36V | 31.3±0.7V |
| 48V | 41.8±1.0V |

Note: If battery under-voltage protection is triggered by force button, please refer to 5.7.3.



6.1.5 Reverse polarity protection

Power supply has built-in MOSFETs to achieve reverse polarity protection. When the faulty condition removed, power supply will automatically recover without damage.

## 6.2 Failure correction

| Status | Possible cause | Suggestion for fault correction |
|---|---|---|
| Battery back-up failure | Un-connected, low voltage battery | Check connection, specification of battery, or change battery |
| Battery start failure | Button: low battery voltage/reverse connection | Check connection or change new battery |
| | CN12: bad connection | Make sure PIN7&8 of CN12 well-connected |
| Automatically shut down under suitable AC input | Battery discharging peak power over time(Red LED flashes at 4 pulses) | Check load condition and re-power on. |
| | Over temperature (Red LED flashes at 6 pulses) | Cool down temperature and re-power on. |
| | Over voltage (Red LED flashes at 2 pulses) | Check specification of battery |
| | Short circuit (Red LED flashes at 5 pulses) | Eliminate abnormal condition and re-power on. |
| Battery can not be fully charged | Aged battery or malfunction | Change new batteries |
| | Small cross-section of cable | Choose a proper cable for usage |
| | Wrong charging curve | Double check the characteristic of battery |

**Note : 1. Refer to chapter 4.3 for LED indicator.**

**2. Please contact MEAN WELL's distributor if above faulty condition is not removable.**




6

## 7.Warranty

This product provides three years warranty under normal usage. Do not replace parts or any form of modification to the product in order to keep the warranty effectively.

**※ MEAN WELL possess the right to adjust the content of this manual. Please refer to the latest version of our manual on our website.**
**https://www.meanwell.com**

MEAN WELL WEB User's Manual

## 8.Environmental declaration information

https://www.meanwell.com//Upload/PDF/RoHS_PFOS.pdf
https://www.meanwell.com//Upload/PDF/REACH_SVHC.pdf
Https://www.meanwell.com//Upload/PDF/Declaration_RoHS-E.pdf

明緯企業股份有限公司
MEAN WELL ENTERPRISES CO., LTD.
248 新北市五股區五權三路 28 號
No.28, Wuquan 3rd Rd., Wugu Dist., New Taipei City 248, Taiwan
Tel:886-2-2299-6100 Fax:886-2-2299-6200
http://www.meanwell.com E-mail:info@meanwell.com